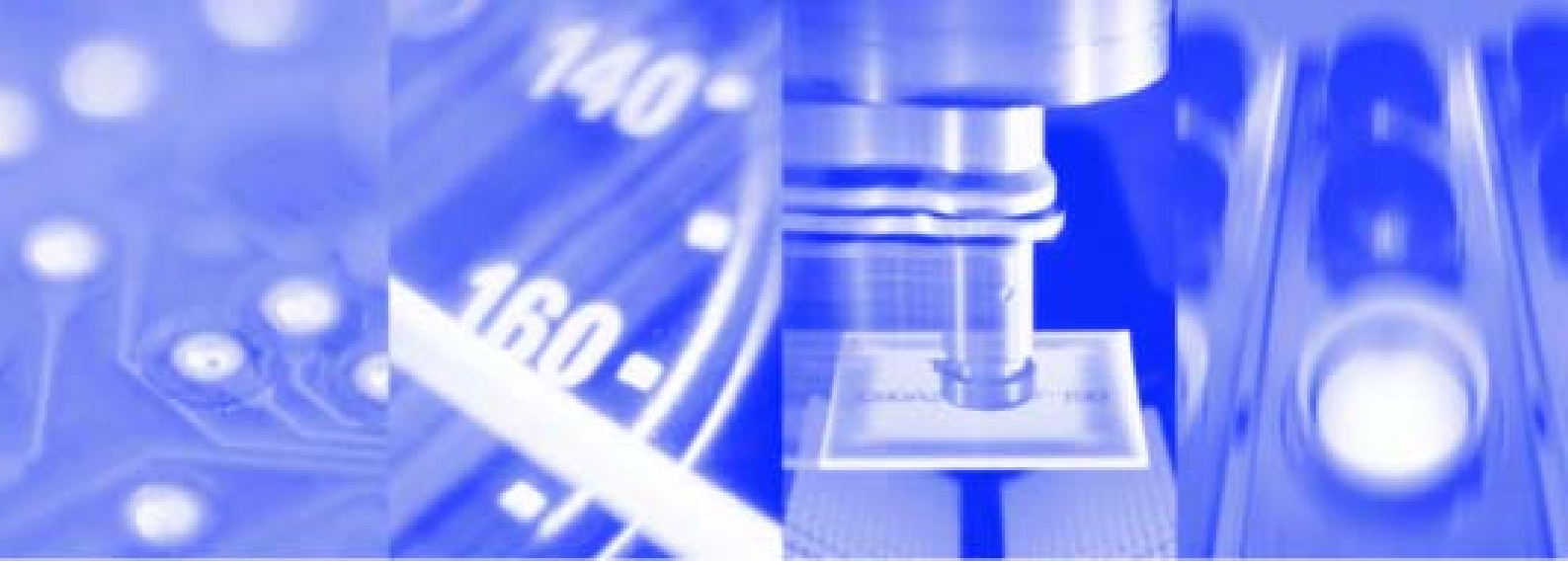

MY100

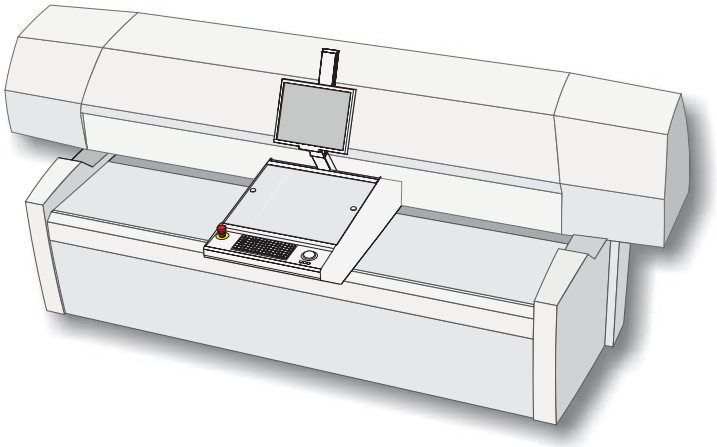

Operator’s Manual

TPSys™ 2.6

English

P-050-0012-EN

For a fast changing world MYDATA®

MY100

Component Placement Machines

Operator's Manual

English

This document is intended for the MY100 running the TPSys software version 2.6.

A standard system and available options are covered by this document. Depending on your system configuration you may lack some of the features mentioned in the document.

Disclaimer
Hardware and software mentioned in this document are subjected to continuous development and improvement. Consequently, there may be minor discrepancies between the information in the document and the performance or design of the product. Specifications, dimensions and other statements mentioned in this document are subject to changes without prior notice.

Federal Communications Commission (FCC)
This equipment has been tested and found to comply with the limits for a Class A digital device, pursuant to part 15 of the FCC Rules. These limits are designed to provide reasonable protection against harmful interference when the equipment is operated in a commercial environment. This equipment generates, uses, and can radiate radio frequency energy and, if not installed and used in accordance with the instruction manual, may cause harmful interference to radio communications. Operation of this equipment in a residential area is likely to cause harmful interference in which case the user will be required to correct the interference at his own expense.

Do not start, operate or service the machine until you have read and understood the safety chapter.

MYDATA automation AB, Box 20155, S-161 02 Bromma, Sweden.
Phone +46 8 475 55 00 – Fax +46 8 475 55 01 – Internet www.mydata.com

Table of Contents

New Features Overview

- MY100 is a new machine type in the MYDATA range of component placement machines.
- MY100 is equipped with two X wagons that increase the mount speed.
- MY100 requires TPSys version 2.6 support.
- MY100 supports the new Agilis Stick Magazine, ASM, that handles components delivered in sticks (also called tubes).
- Improved database structure (included in the TPSys version 2.6).

Text Conventions

This document uses text conventions to present information in various situations. This is explained below.

Danger, Warning, Caution, and Note

In this document a particular text layout is used to make danger, warning, and caution information evident. A triangular icon identifies the type of risk and the text describes the risk.

Danger, warning, and caution information **must** be followed.

Assisting information, notes, have the same layout but never triangular icons.

Danger

DANGER! Danger means a potentially dangerous situation that can cause death or severe bodily injury. The icon identifies the type of risk.

Warning

WARNING! Warning means a potentially dangerous situation that can cause bodily injury or considerable damage to the system or equipment. The icon identifies the type of risk.

Caution

CAUTION! Caution means that the system or equipment can be damaged or data be lost. To distinguish caution information from warning and danger information, this icon is always an empty triangle.

Note, example 1

A note contains any type of assisting information.

Note, example 2

One type of assisting information is tips, which normally have this icon.

Italic Font

Italic font is used for software screen text (for example *Parameter 1*), names (for example *Spare Parts Catalog*), and for warning text (described in the previous section).

Bold Font

Bold font is used for particular important words (for example This **must not** be done in reverse order).

Menu Selections

When describing software handling, menu selections are described in the following format:

File > *Page Setup* > *Paper Size* > *Portrait* > *OK*

This example describes to open the *File* menu and select the *Page Setup*, *Paper Size*, and *Portrait* options, and finally click the *OK* button.

Lists

Lists of items, points to consider, or procedures that have no relative order appear in bulleted or hyphenated format like this:

- Item 1.
- Item 2.

or

  - Item 1.
  - Item 2.

Procedures that must be performed in a specific order appear in numbered lists like this:

1. Perform this step first.
2. Perform this step second.

Icons

Throughout this manual, icons are used to pay your attention to, or complement, the information. There are icons for the following features:

Navigation

This type of icon will help you to navigate on the screen where TPSys windows are described. It points out the area in the window where the described information is found.

Camera view

This icon shows that you are working in a camera view.

TPSys web interface

This icon indicates that you can also use the TPSys web interface.

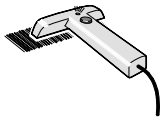

Barcode scan

This icon indicates that you can use a barcode scanner.

1. Safety

Before starting the machine, it is necessary that the operator, foreman and any other personnel involved in machine operation, maintenance or service understand and follow these points:

- This machine is designed to pick components from their packaging and place them onto printed circuit boards, and to apply glue. The machine must be used exclusively for these two purposes and nothing else.
- The machine must be operated by qualified personnel only. Qualified personnel should meet the following qualifications:
  - Be above 18 years of age.
  - Have normal depth perception, field of vision, reaction time, manual dexterity, coordination, and no tendency to dizziness.
  - Completed operators training.
- All personnel involved in machine operation must understand the use of the emergency stop buttons and how to manually move machine elements in case of emergency. See the *Emergency Stop Button* and *Emergency Movement of Machine Elements* sections in this chapter.
- Anyone operating this machine must obey all warning signs. See the *Warning Signs* section in this chapter.
- At least one manual that describes the warning signs of the particular machine type must always be kept, for instance if the machine is upgraded with a later TPSys version.
- Apart from the daily maintenance described in the operator's manual, the machine is to be serviced by authorized maintenance engineers only.
- Excess component tape from tape magazines shall be cut from the front of the machine when it is not in operation.
- When inserting or removing tools to or from the tool bank, the emergency stop button shall be pressed down.
- The emergency stop button shall be pressed down when a tool or component is manually inserted or removed from the X wagon of the machine.
- If there is a risk that any unauthorized personnel might alter the system settings and thus the behavior of the machine, then the logon facility for individual access rights has to be used.
- Ensure that all covers and shields are intact, mounted and closed while the machine is in operation.
- Do not disable or disengage any safety switch or sensor.
- Do not configure or modify MYDATA machines or devices without consulting MYDATA. The machines, devices or the interfaces between them might become unsafe.
- Do not use chemicals or other substances that may have any influence on the operator or other personnel involved in the machine operation.

Emergency Stop Button

All MYDATA placement machines have red emergency stop buttons. These will stop all machine movements immediately when pressed down.

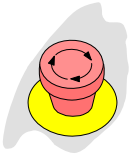

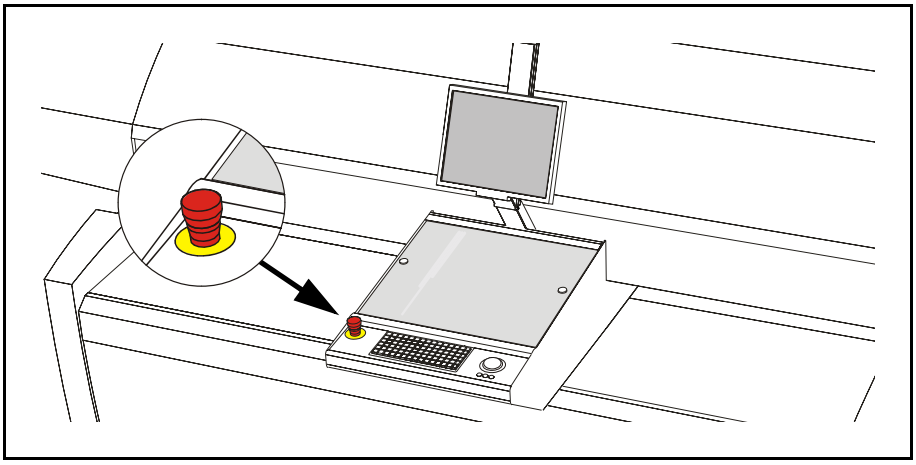

Figure 1-1. Emergency stop button.

There is one emergency stop button located at the front of the machine, at the keyboard. This emergency stop button is released by being turned clockwise.

WARNING! The emergency stop button must always be pressed down when hands, fingers, tools or other objects are within a shielded area or in the risk area of movable machine elements such as internal conveyors, Y wagon or Tray Wagon Magazine.

Emergency stop buttons on all MYDATA optional devices, such as TEX Tray Exchanger and conveyor systems, have the same function. They switch off all motors, and release movable machine elements.

Activating a stop system in an optional device, for instance opening a TEX Tray Exchanger door, stops only that optional device. The placement machine is not stopped by such an action.

Restart

To restart a machine after an emergency stop button has been released, enter any command on the keyboard.

Emergency Movement of Machine Elements

The X wagon, Y wagon, and Tray Wagon can be moved manually after pressing the emergency stop button down.

If an accident has occurred and an emergency movement of a machine element is required, use the following procedure:

1. Press the emergency stop button down.

   This will immediately stop the machine and disconnect the motors used to position the machine elements.

2. Move the machine element away by hand.

Warning Signs

The warning signs on the machine must be observed as this machine contains fast moving parts, magnetic fields, and high voltage. The machine has warning signs placed as shown on the following pages.

At least one manual that describes the warning signs of the particular machine type must always be kept, for instance if the machine is upgraded with a later TPSys version.

All signs must be kept clean and readable.

Magnetic Fields

1

2

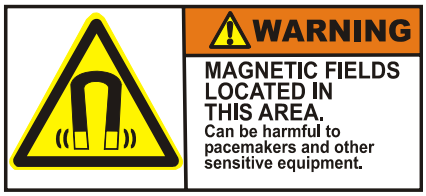

This sign warns for permanent magnets in the machine. They have extremely powerful magnetic fields.

The figures show signs according to:

- European and Canadian standards (’1’).
- US standards (’2’).

WARNING! Personnel wearing pace-makers must be careful in the vicinity of permanent magnets.

CAUTION! Do not approach permanent magnets when carrying objects made of iron, steel or nickel.

CAUTION! Do not wear watches near permanent magnets since they can be damaged.

CAUTION! Do not bring magnetic data media, check or credit cards near permanent magnets. The data on the data media may be erased by the magnetic field.

This sign is applied as follows.

– Two signs on the conveyor component shield.

  The magnets are located under the shield.

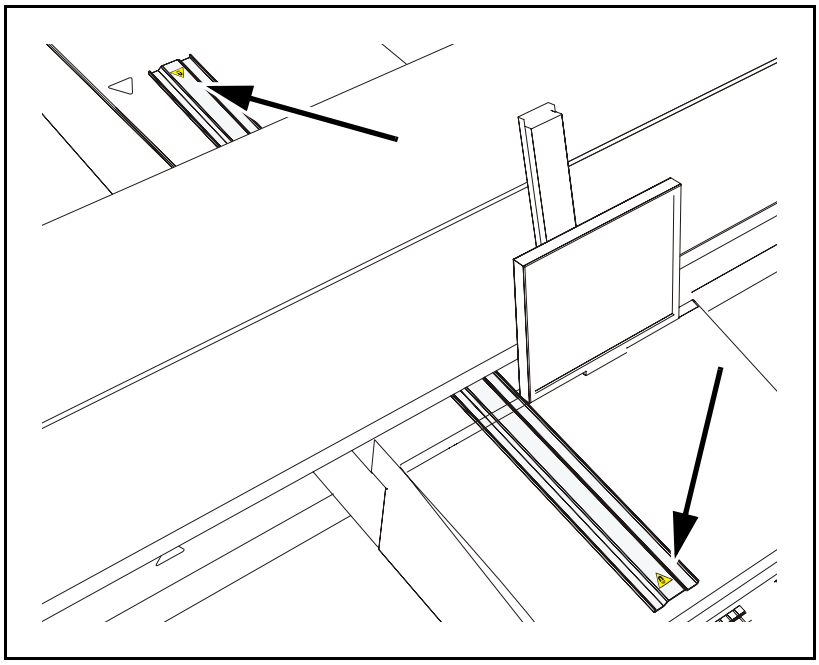

Figure 1-2. Signs warning for magnetic fields.

– Two signs on the X beam end plates.

  On the X beam there is a row of magnets (’M’ in Figure 1-3). These are used to power the X wagon.

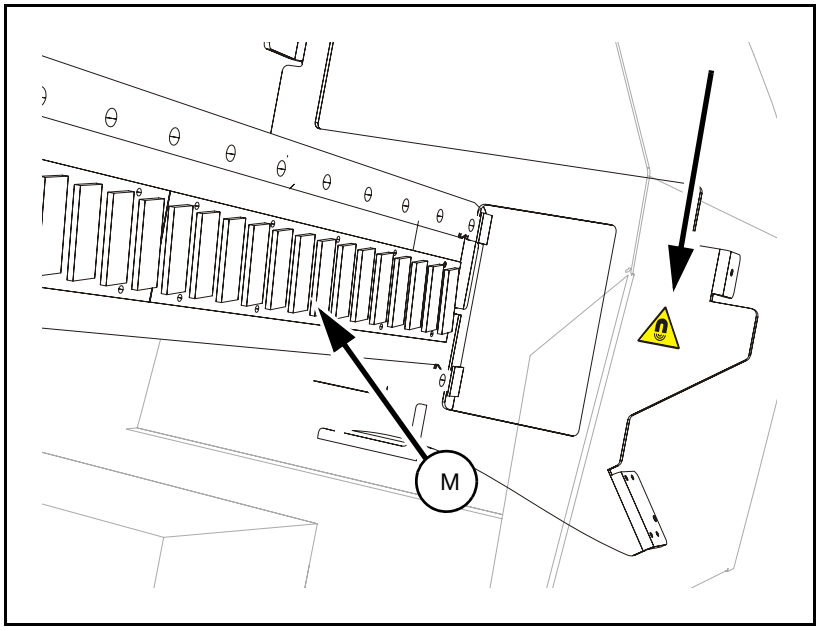

Figure 1-3. Warning sign on the right end plate.

Fast Moving Machinery

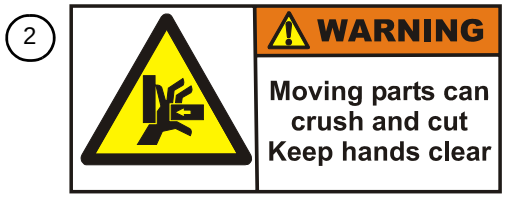

This sign warns of fast machine movements. Ensure that all covers and shields are intact, mounted and closed while the machine is in operation. Do not disable or disengage any safety switch or sensor.

The figures show signs according to:

– European and Canadian standards (’1’).

– US standards (’2’).

This sign is applied as follows.

– Two signs on the front glass shield, see Figure 1-4.

  These signs warn of the fast X-wagon movement.

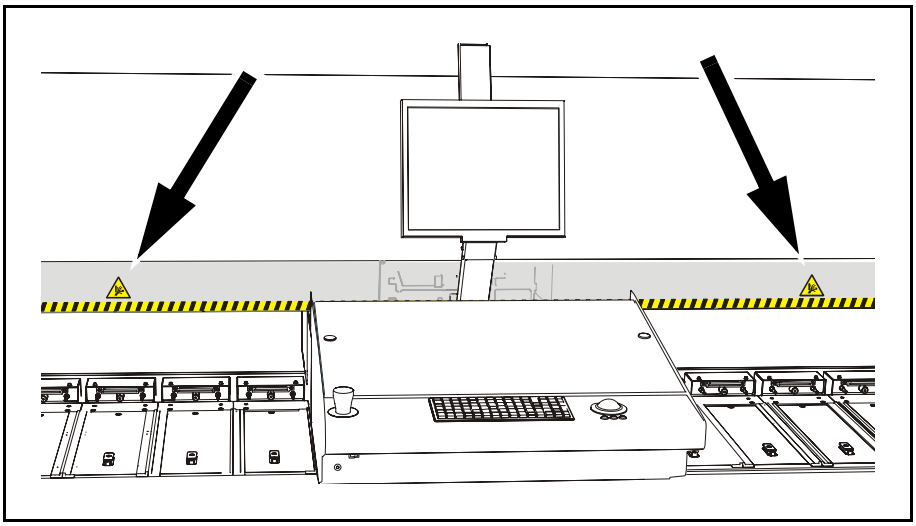

Figure 1-4. Warning signs and striped tape on the front glass.

A striped warning tape on the bottom of the glass shield indicates the dangerous area. No hands, fingers, or other objects are allowed beyond the glass shield.

– Two signs on the T3/T4 conveyor glass shield (on the rear of the machine), see Figure 1-5.

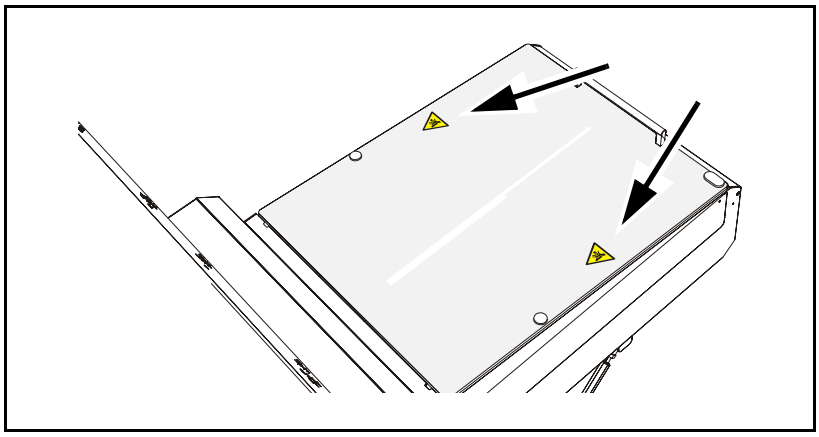

Figure 1-5. Signs on T3 conveyor glass.

These signs warn of fast Y-wagon movements. No hands, fingers, or other objects are allowed beyond the glass shields.

Dangerous Voltage

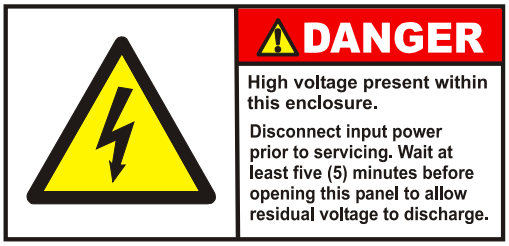

This sign warns of dangerous residual voltage in an internal electronic cabinet. This cabinet has powerful capacitors. When power is cut, these capacitors are still charged with live voltage. Only authorized service personnel are allowed to open the machine when such a unit is open.

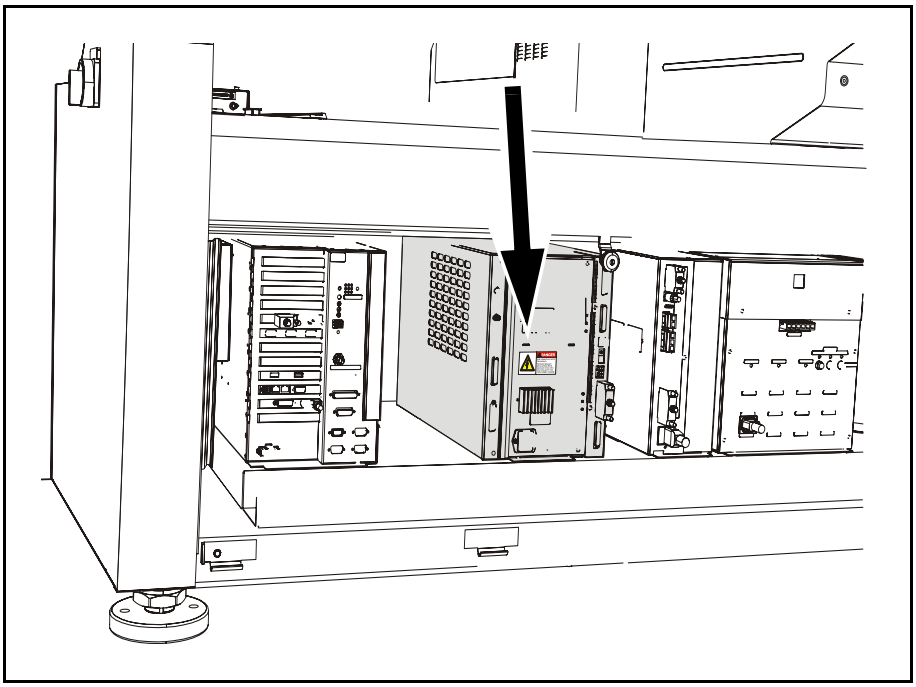

Figure 1-6. Electronic cabinet.

Disconnect input power before servicing the machine. Wait at least five minutes before opening the cabinet to allow residual voltage to be discharged.

DANGER! Always lock out and tag the main switch before opening the hoods and commencing any servicing within the machine.

1

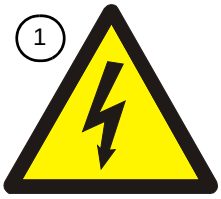

2

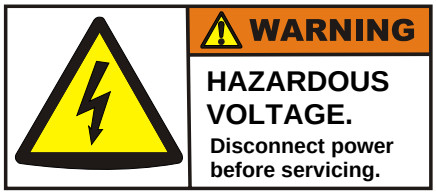

This sign warns of electric shock. Units, on which this sign is placed, contain dangerous voltage levels. Power must be switched off before opening the unit. Only authorized service personnel are allowed to operate the machine when such a unit is open. Hazardous voltage is present with machine power off.

The figures show signs according to:

- European and Canadian standards ('1').
- US standards ('2').

This sign is applied as follows.

- One sign at the main switch, see Figure 1-7.

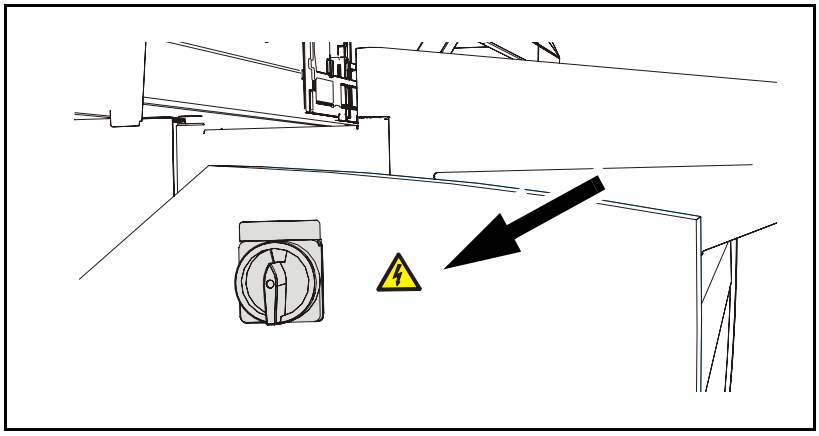

Figure 1-7. Sign at the main switch.

- One sign on the Power Input Unit (PIU) cover, inside the machine, see Figure 1-8.

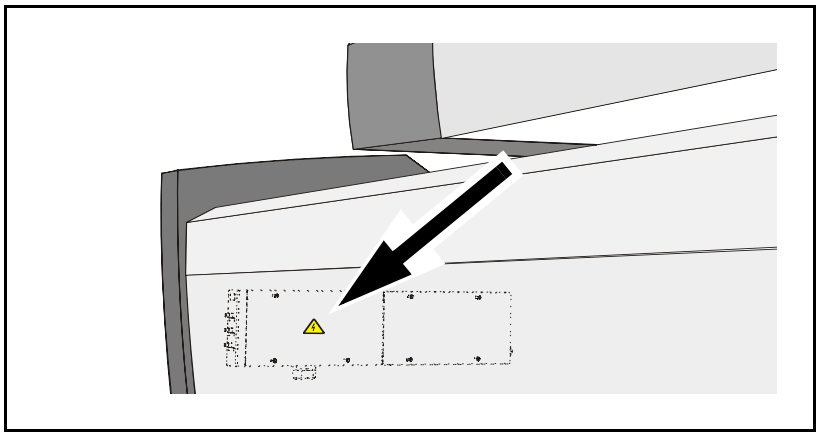

Figure 1-8. Sign on the PIU, inside the machine.

Fast Horizontal Movements

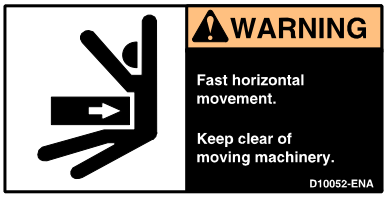

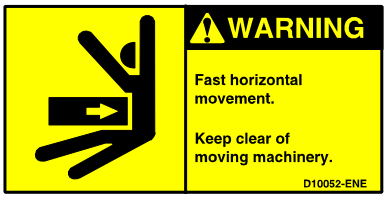

This sign warns of fast horizontal movements. The sign is located on optional Tray Wagon Magazines (TWM) and it is applied as follows.

– Two signs on the TWM.

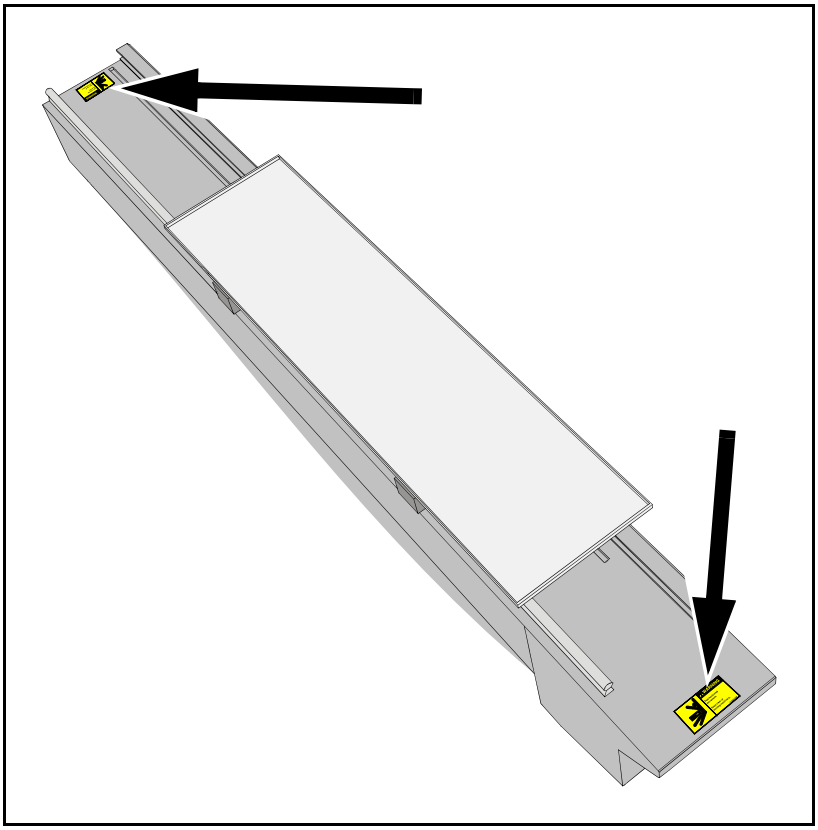

Figure 1-9. Signs on the TWM.

Type Plate

A type plate shows the name and address of the manufacturer, the machine type and serial number, and manufacturing year and country. An example of a type plate is shown below.

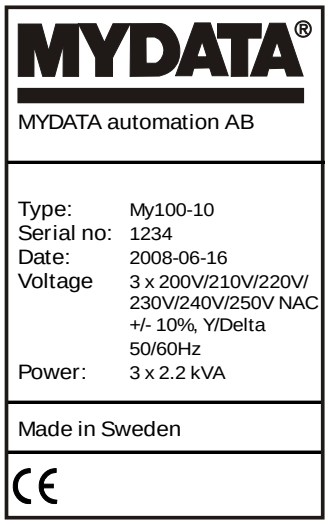

Figure 1-10. Machine type plate.

The type plate is found at the back of the machine, on the machine stand.

TEX Tray Exchanger

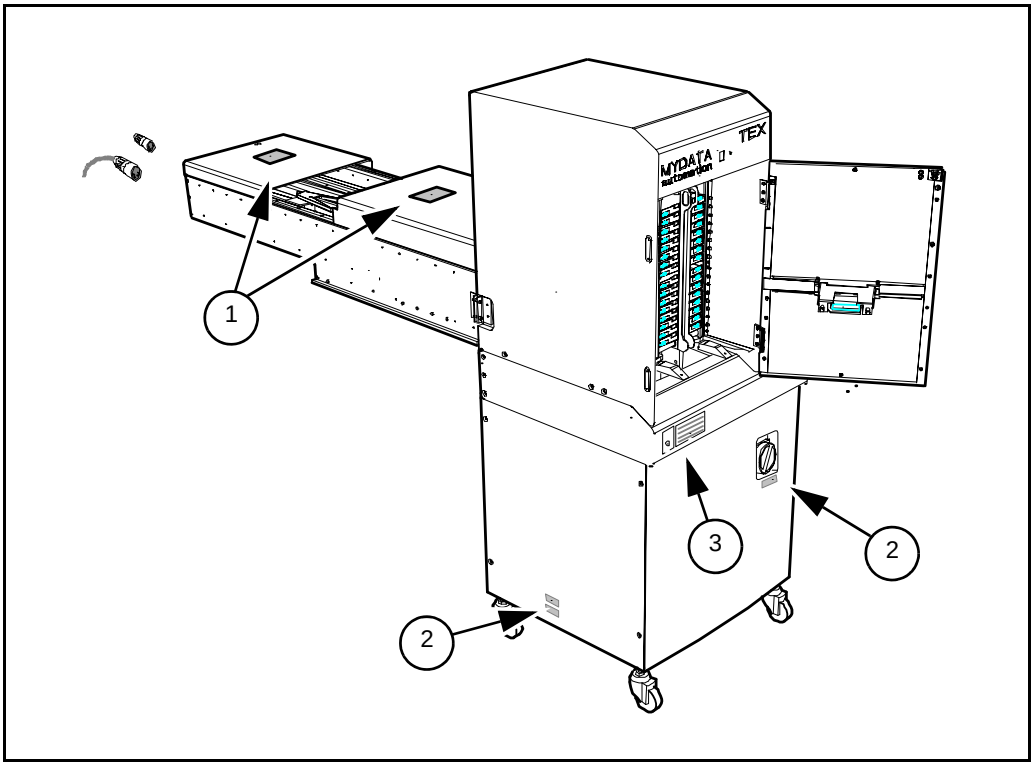

Figure 1-11. TEX Tray Exchanger.

Number and position of each sign type is described in the following text. If a sign is missing, it must be replaced immediately. Part numbers are printed on the signs, but can also be read from the following description.

TEX Tray Exchanger Warning Signs

Warning signs are located as shown in Figure 1-11.

1

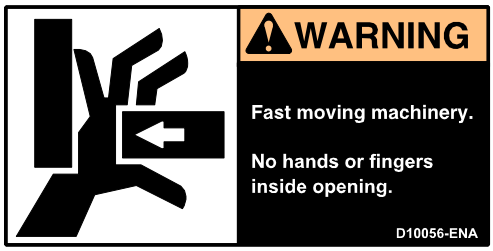

Sign 1 (D-010-0056-ENA/ENE America/Europe) warns of the fast shuttle movement. No hands, fingers, or other objects are allowed beyond the shield.

Two warning signs are applied on the safety hoods as ('1' in Figure 1-11).

2

Sign 2 (K-049-0073) warns of electrical circuits behind the panels still being alive, even after the main power switch is turned off.

Two warning signs are applied as shown in Figure 1-11.

3

Sign 3 (D-024-0345) states the laser classification for TEX Tray Exchanger units equipped with laser barcode scanner. One certification sign is applied as shown in Figure 1-11.

TEX Tray Exchanger Emergency Stop

There are safety switches at the two hoods and at the door. When a switch is activated, all movements in the TEX Tray Exchanger are stopped immediately. The placement machine is not affected by these switches.

When the emergency stop button on the placement machine is pressed down, the TEX Tray Exchanger is also stopped.

TEX Tray Exchanger can thus be stopped in four different ways:

- The door is opened.
- The front cover is opened.
- The rear cover is opened.
- The emergency stop button on the placement machine is pressed down.

Glue Station

The glue station has a safety shield.This will ensure that no fingers or hands can pass beyond the machines glass shield.

Ensure that this cover is intact and mounted while the machine is in operation.

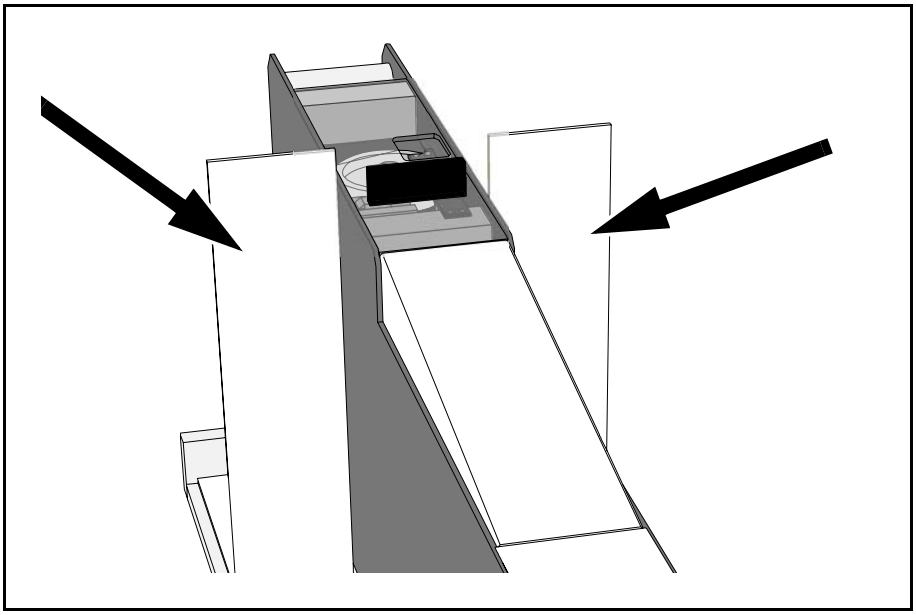

Figure 1-12. Glue station safety shields.

Warnings in the Manual

Throughout the manual this symbol is used to call your attention to commands that starts machine movements. The symbol refers to the warning signs, which must be obeyed to eliminate the risk of injury. If there are instructions accompanying this symbol, they must be followed.

Also, to avoid damage, this symbol means that the operator must be observant of the following:

Ensure that there are no foreign objects on the assembly table, near the tool bank, or within the X wagon, Y wagon, or Tray Wagon Magazine moving areas, and that the standard tool head and the HYDRA tools are in their upper positions.

Noise

For all MY machines, the equivalent continuous sound pressure level is measured in accordance with EU directive 98/37/EC to be less than 70 dB(A).

Material Safety Data Sheets

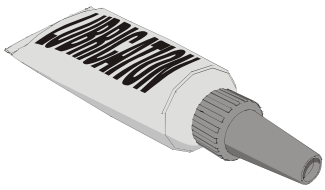

The machine is shipped with various types of grease and oil. Below are references to descriptions of chemical composition and toxicity (Material Safety Data Sheets, shortened to MSDS) of these products.

If you have problems accessing the web sites referenced below, contact MYDATA support.

Oils

HYDRAULIC OIL, Shell Tellus Oil 46

Request MSDS from your local distributor, or the manufacturer Royal Dutch Shell plc (http://www.shell.com).

Greases

GREASE PASTE OKS 270, part number K-013-0014

MSDS is found at http://www.mydata.com, document number P-040-0137-EN. A logon user name and password may be required.

GLEITMO 585 K

Request MSDS from your local distributor, or the manufacturer Fuchs-Lubritech Gmbh (http://www.fuchs-lubritech.com/cms).

GREASE PARALIQ GA 351, 25G

Request MSDS from your local distributor, or the manufacturer Klüber Lubrication (http://www.klueber.com).

GREASE AFA THK, part number K-035-0095

MSDS is found at http://www.mydata.com, document number P-045-0028-EN. A logon user name and password may be required.

OMEGA 28 GREASE, MYDATA part number L-012-0860

MSDS is found at http://www.mydata.com, document number P-040-0140-EN. A logon user name and password may be required.

Lead Acid Batteries

Batteries that may be included in the machine:

BATTERY LEAD 6V 12AH, MYDATA part number E-053-0001.

BATTERY 12V 7AH, UPS 151X65X94, MYDATA part number E-053-0002.

BATTERY 6V 4.5AH 101X47X70, MYDATA part number E-053-0003, used for instance in UPS EBK-350.

The manufacturer for the batteries above may vary over time. The batteries shipped with machines or data servers may have different manufacturers than after-sales batteries. For correct MSDS, locate the battery and read the manufacturer information, and refer to the table below for MSDS location.

Leader

http://www.celltech.internetbutik.se/produkter/upload_pdf/leader/msdsleader.pdf

Panasonic

http://www.panasonic.com/industrial/battery/oem/

Yuasa

http://www.yuasabatteries.com/pdfs/MSDS_LeadAcidBattery.pdf

In Case of Fire

Only use carbon dioxide (CO_2) extinguishers or dry chemical extinguishers in case of fire. Under no circumstances use water, as the machine contains electronic equipment.

ESD

ESD, ElectroStatic Discharge, is one of the few things an individual can unwittingly do to damage or destroy components. Much like the shock you receive when rubbing your feet on a carpet and then touching some metal. ESD can occur when working and will cause components you touch to no longer work properly.

How To Help Prevent ESD

The following steps help reducing the chances of ESD:

- Do not touch components unless you are constantly earthed by an ESD wrist strap or you are wearing ESD shoes or ESD shoe earthing strips on an ESD floor.
- Always ensure that people, the workplace and packaging are safely earthed when handling electrostatic sensitive components.
- If the packaging is not conductive, place the modules in a conductive envelope before packaging. Use ESD bags, domestic aluminum foil or paper, for example. **Never** use plastic bags or film.
- Make sure not to wear any clothing that collects electrical charge, such as a wool sweater or synthetic fibers.
- Most plastics can easily become charged and must therefore be kept away from components.
- Do not touch electronic modules unless it is absolutely necessary to do so in order to carry out other work. If it is necessary, make sure that you do not touch pins or printed conductors.

All MYDATA pick-and-place machines have jacks for wrist straps. They are marked with an ESD sign.

2. Running the Machine

The intention with this chapter is to guide an operator how to run this machine in plain operation under certain conditions, which are described below. The signification of an operator is also described below.

This chapter contains a brief description of the main control devices needed to run the machine, and a step-by-step instruction about how to run a job.

Conditions for plain operation

The following conditions must be met in order to run this machine with the information described in this chapter:

- All information needed for TPSys to produce a specified PCB type is loaded.
- Required components have been kitted and are available in stock.
- Required machine setup has been performed, for instance fiducial mark check.

The operator is supposed to bring components from the store room and to load these into the machine.

Signification of an operator

An operator is a person who has been trained in the operation of the machine. Operators are authorized to use any functions associated with the operation of the machine and may call up any menus needed to run the machine.

Main Control Devices

To run the machine in plain operation, you will only need the main control devices, that is trackball, keyboard, and monitor. These are described below.

TPSys menus, windows, and hardware controls are detailed in Chapter 3.

Trackball

A trackball controls the X and Y movements of the machine. It is operational when the cross hairs are shown on the monitor.

Keyboard

Most information is entered into the machine by using a keyboard.

The following command keys are involved in most TPSys windows. Other command keys will be explained as they appear in various windows.

Enter or Return

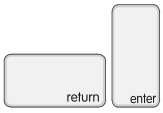

Normally, <Enter> or <Return> means to confirm.

Esc

In contrast to <Enter>, the <Esc> key is used to cancel the current activity without saving data. <Esc> is also used to return to a previous window. If <Esc> is pressed several times in any window, the main window will be shown.

Arrow keys

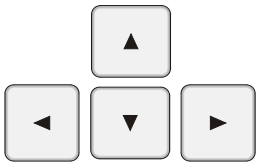

Generally, the arrow keys are used to move the cursor in the direction indicated by the arrow. This is used to select options in menus and to move the cursor in lists containing many fields.

Monitor

Menus and various windows, including camera windows, are shown on the monitor.

From a main menu you can select windows for various purposes. The main menu is shown in Figure 2-1.

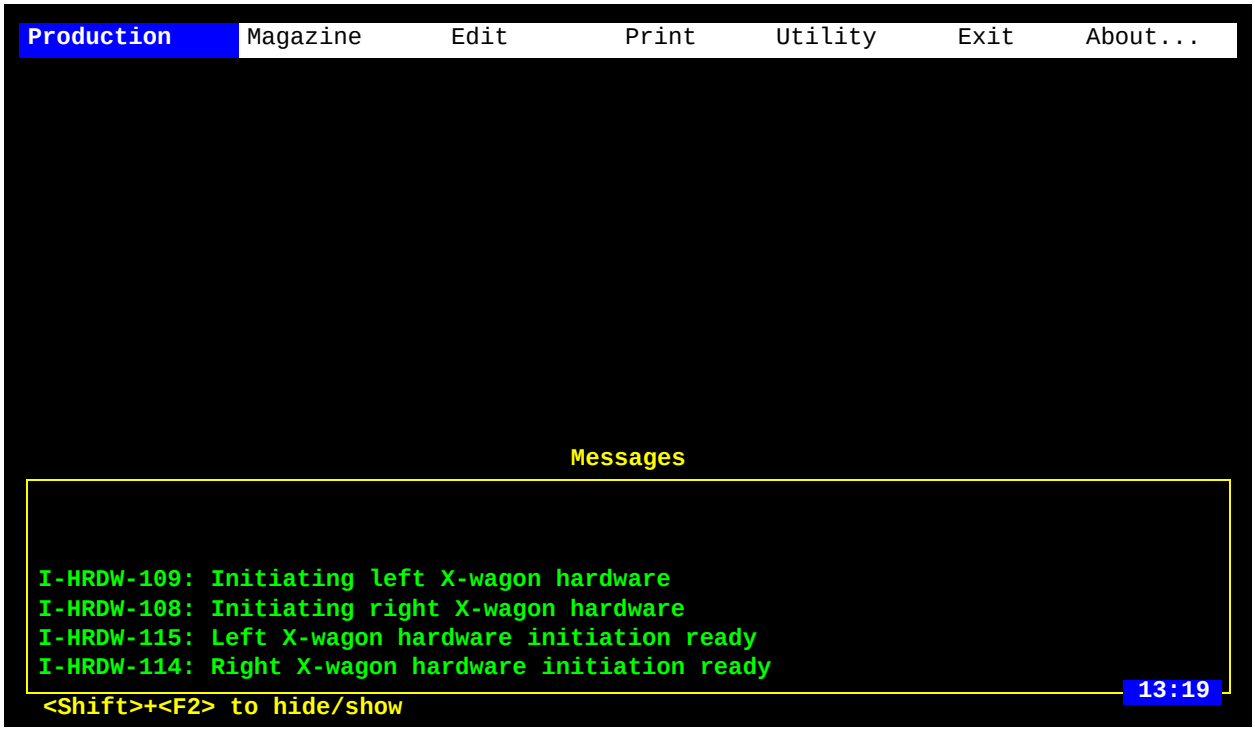

Figure 2-1. Main window.

Running a Job

These are the basic steps to run a job:

1. Preparation
2. Loading components.
3. Locating magazines.
4. Loading layout.
5. Assembling
6. Monitoring
7. Changing job or shutting down.
8. Daily maintenance.

These steps are detailed on the following pages.

Step One – Preparation

When you produce PCBs in a MYDATA machine, you will work with a *layout*. A layout is the basic information needed by the machine's system (TPSys) to be able to place components on PCBs. The layout information contains data such as board size, component names, and component placement information.

To prepare for production you need to know the following:

- Layout name.
- How many PCBs to produce.
- Components needed.
- If components are already available in the machine, or if you must load components into magazines.

You will probably get a work order from your foreman. This will detail which layout with included PCBs you will make.

Creating a Layout Preparation Report

In TPSys there is a *Layout Preparation* report feature that helps you to get information about which components are needed. A report can be generated and printed offline. You may also use the TPSys web interface to produce this report.

The report shows information about the components in the layout. It will tell you if components cannot be mounted.

To create a layout preparation report:

1. Select *Print* > *Layout Preparation*.
2. Select one of the following options.
   - *Layout*
   - *Batch size*

     Can be set to either *Indefinite*, or a number of layouts. If no batch size is specified, there will be no component shortage warnings in the report.
   - *Stock location*

     Shows the store location of a missing component. This information is entered using the *Components* window, see the *TPSys, Programming Manual* for details.

Step Two – Loading Components

The *Layout Preparation* report contains information about components needed. If all components are available in the machine, you can proceed with the next section. Are components missing or not available in sufficient quantities you have to load magazines. There are magazines for tape, sticks (also called tubes), and trays.

Tape Magazine

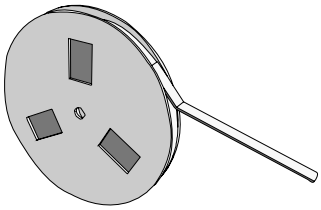

Tape magazines handle components delivered on reels. There is an Agilis family of tape magazines that uses removable feeders. These feeders can be stored with the reels. You load an Agilis magazines as follows:

1. Load an Agilis tape feeder.

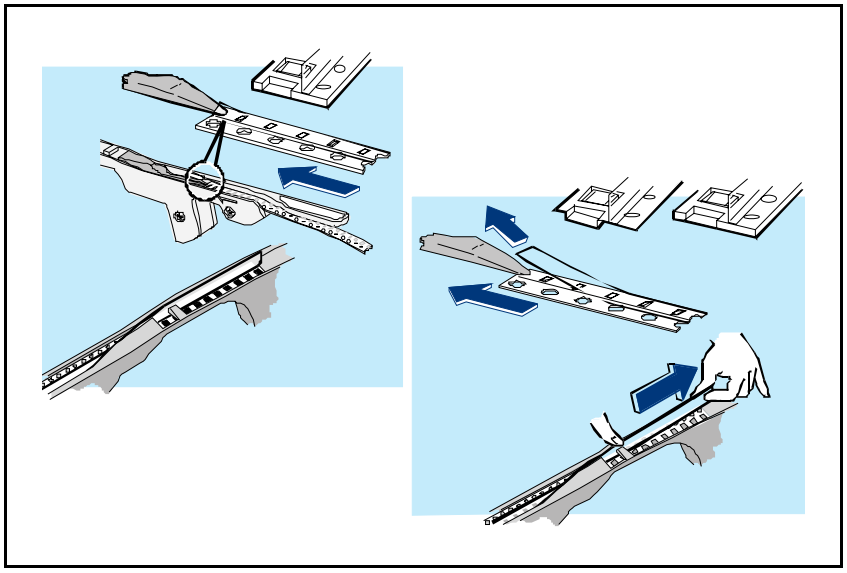

2. Enter component and feeder data into TPSys.

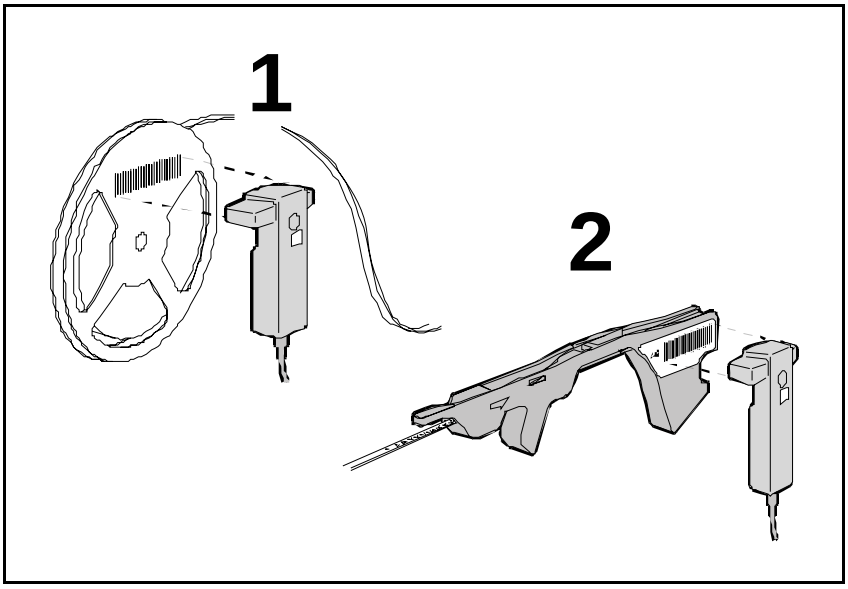

3. Insert feeder and reel into a magazine.

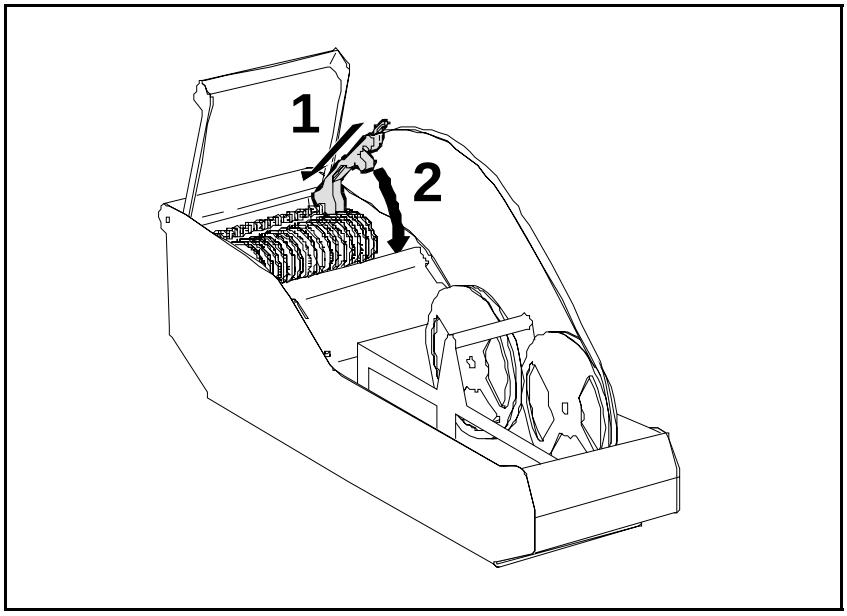

4. Insert the magazine into the machine.

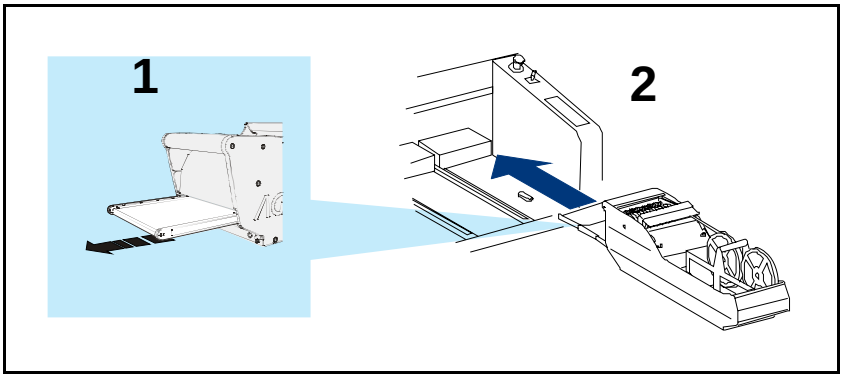

Stick Magazine

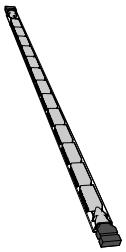

Stick magazines handle components delivered in plastic sticks, also called tubes. These sticks protect components during shipping and provide proper component location and orientation.

1. Select a positioner marked with the package type.

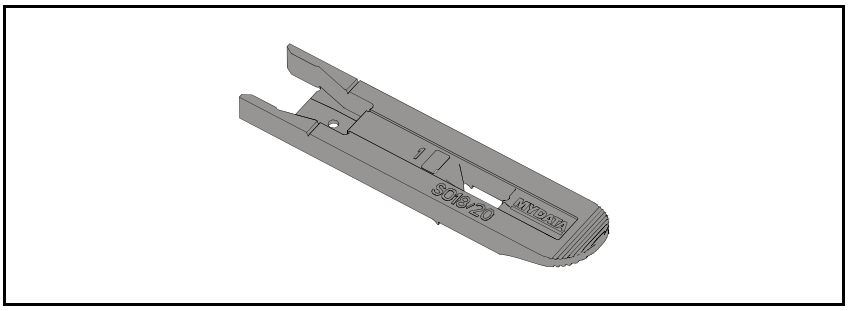

2. Snap the positioner in place on a pallet. Use a default position if possible. You can see the position number through the cut-out in the positioner.

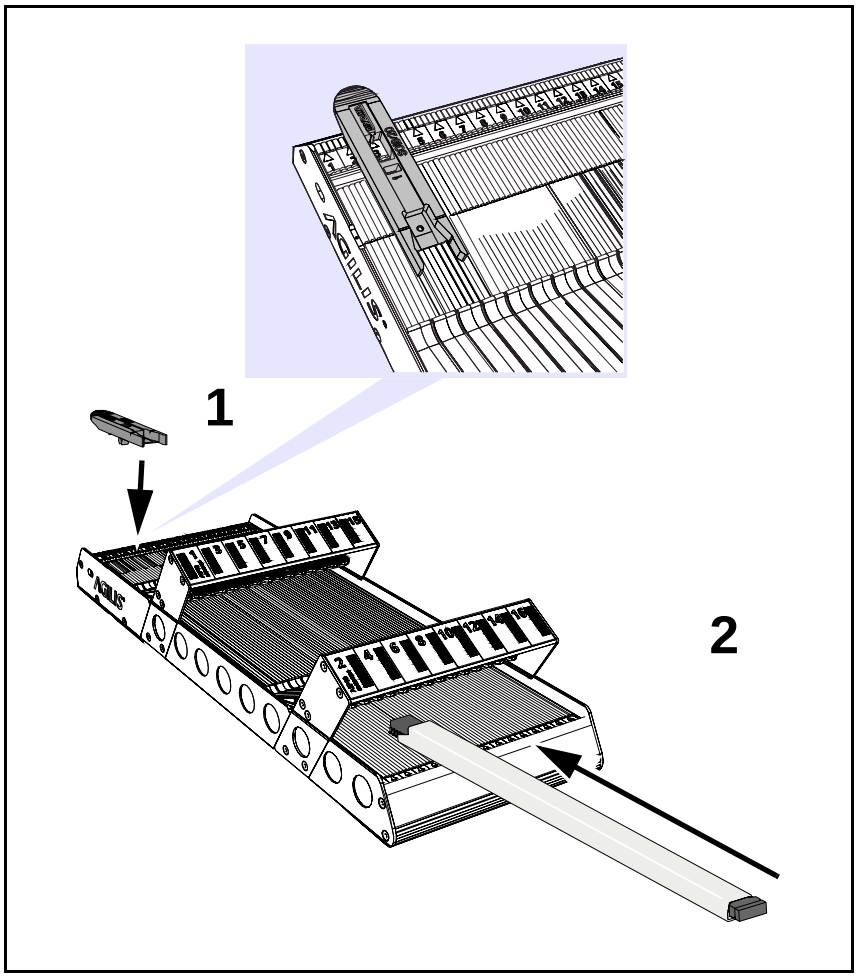

3. Slip the stick through the spring clips on the pallet towards the positioner.

4. Register the feeder in TPSys.

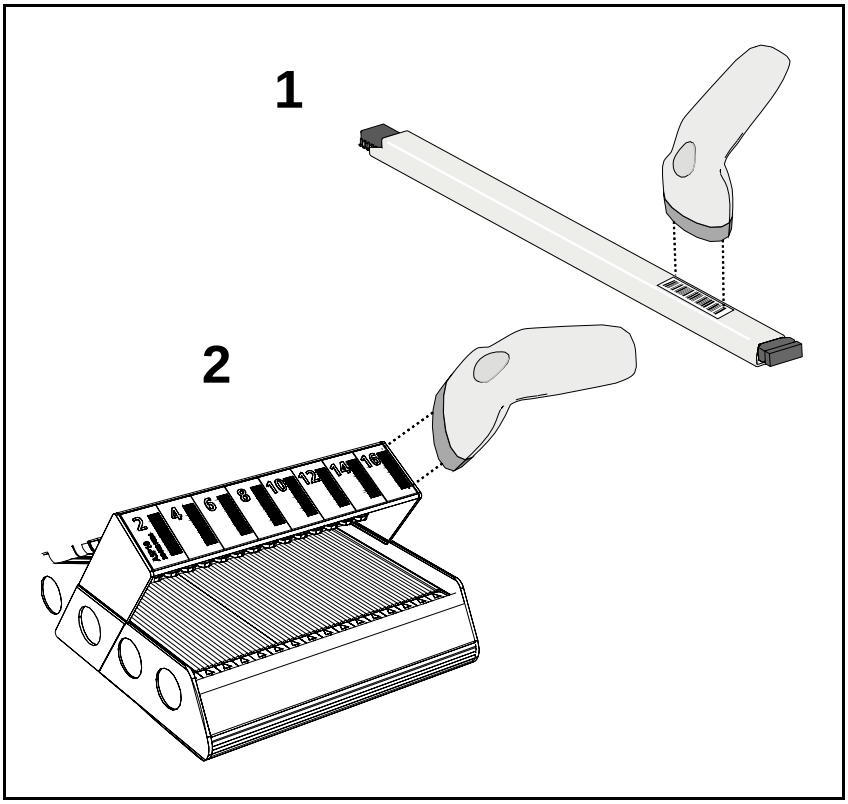

5. Put the pallet into the magazine with the front end first.

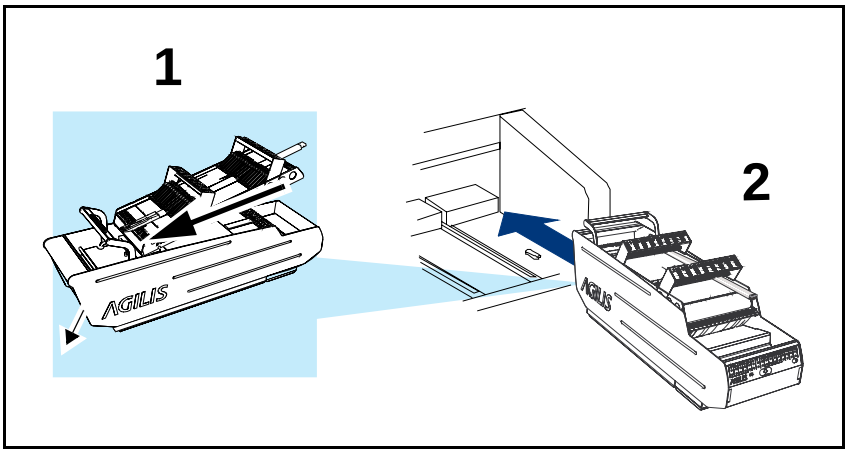

6. Push the safety clamp down.

7. Insert the magazine into the machine.

Tray Magazine

Trays are used to protect higher pin count packages from electrical and mechanical damage during handling and shipment. Trays may be uniformly sized, in compliance with standard JEDEC outlines. Components are usually oriented to a notched corner of the tray, enabling pick-and-place equipment setups to be compatible for all packages and pin counts.

There are three different types of magazines to handle trays: Y-Wagon Magazine, Tray Wagon Magazine, and TEX Tray Exchanger.

Y-Wagon Magazine

This means that trays are placed on top of the assembly table. The tray must be placed on a support, which should have a height of 20–30 mm. MYDATA tray supports are recommended. The tray must be fixed horizontally. Vertically, the tray's weight is enough to keep it in place.

Tray Wagon Magazine

This magazine is inserted in a magazine position of the machine. It has a Y movement of its own. Lock the trays in position on the tray wagon using magnetic strips. Ensure that the strips are not higher than the tray, or they may interfere with operation of the X wagon.

TEX Tray Exchanger

This unit handles a large variety of tray components in two parallel and separately controlled tray tracks. As a cassette is placed in the TEX Tray Exchanger unit and TEX Tray Exchanger is activated, a barcode reader automatically scans the contents in the cassette.

1. Press the release button. Wait for the green LED to be turned off.

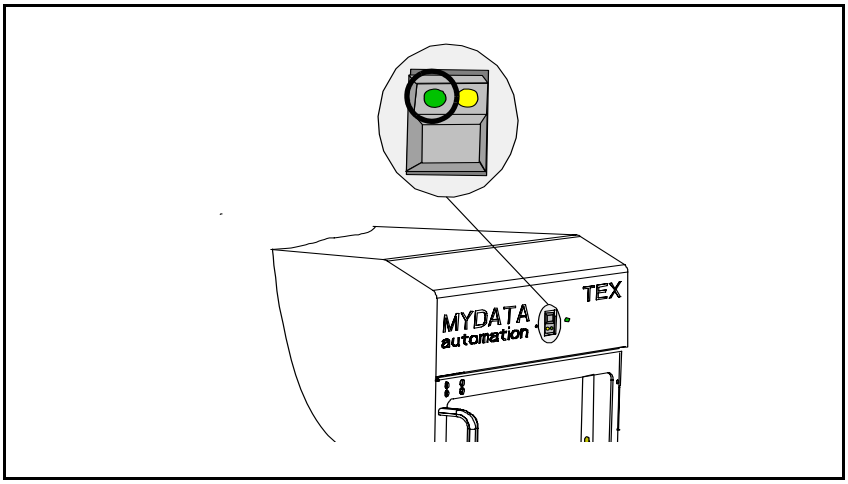

2. Load a tray into the pallet.

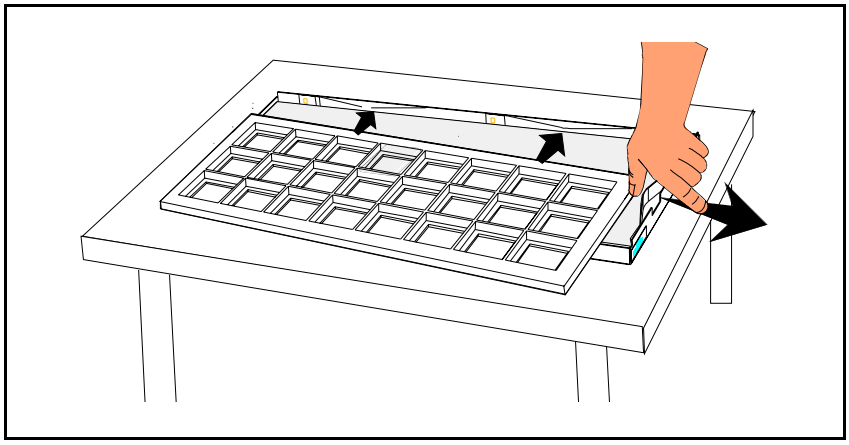

3. Insert the pallets in the TEX Tray Exchanger cassette. Fold the hinged lever up. Secure the lever with the top clamp.

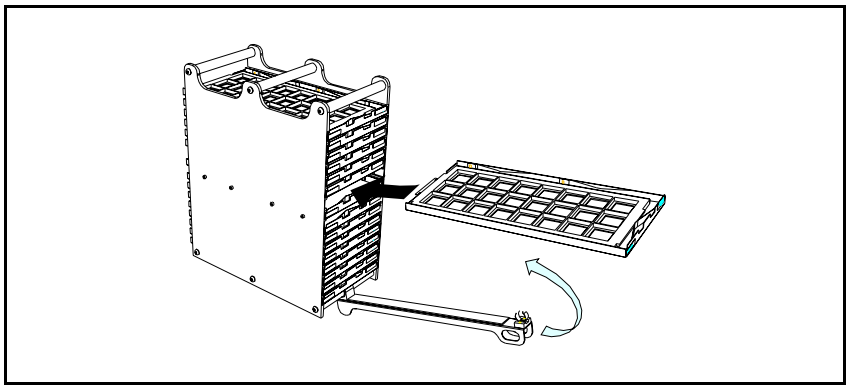

4. Put the cassette into the TEX Tray Exchanger. Make sure it is fully seated into the bottom groves.

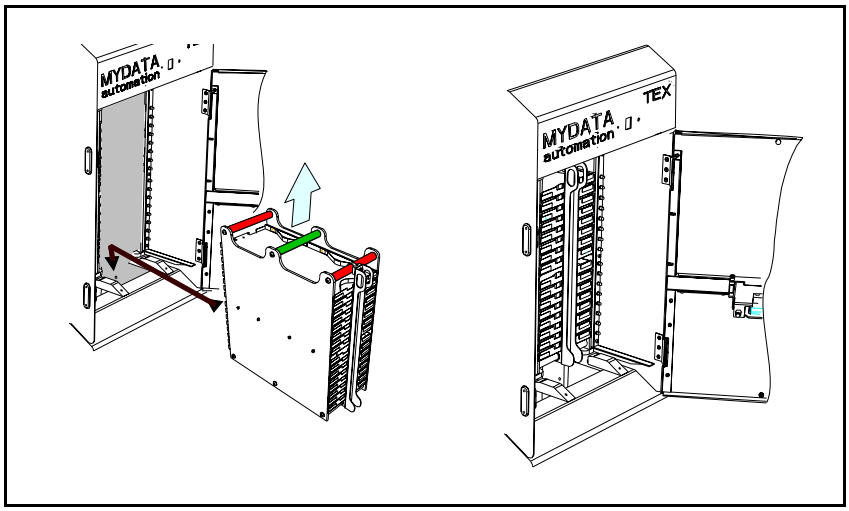

5. Close the door and press the release button. Update the component quantity in the *TEX Magazine* > *Trays* window.

Step Three – Locating Magazines

Before a magazine can be used, it must be located as to a pick line and to pick positions. TPSys locates all magazines automatically before picking. If automatic location fails you will be asked to locate the magazine manually.

1. Select the magazine and feeder to locate.

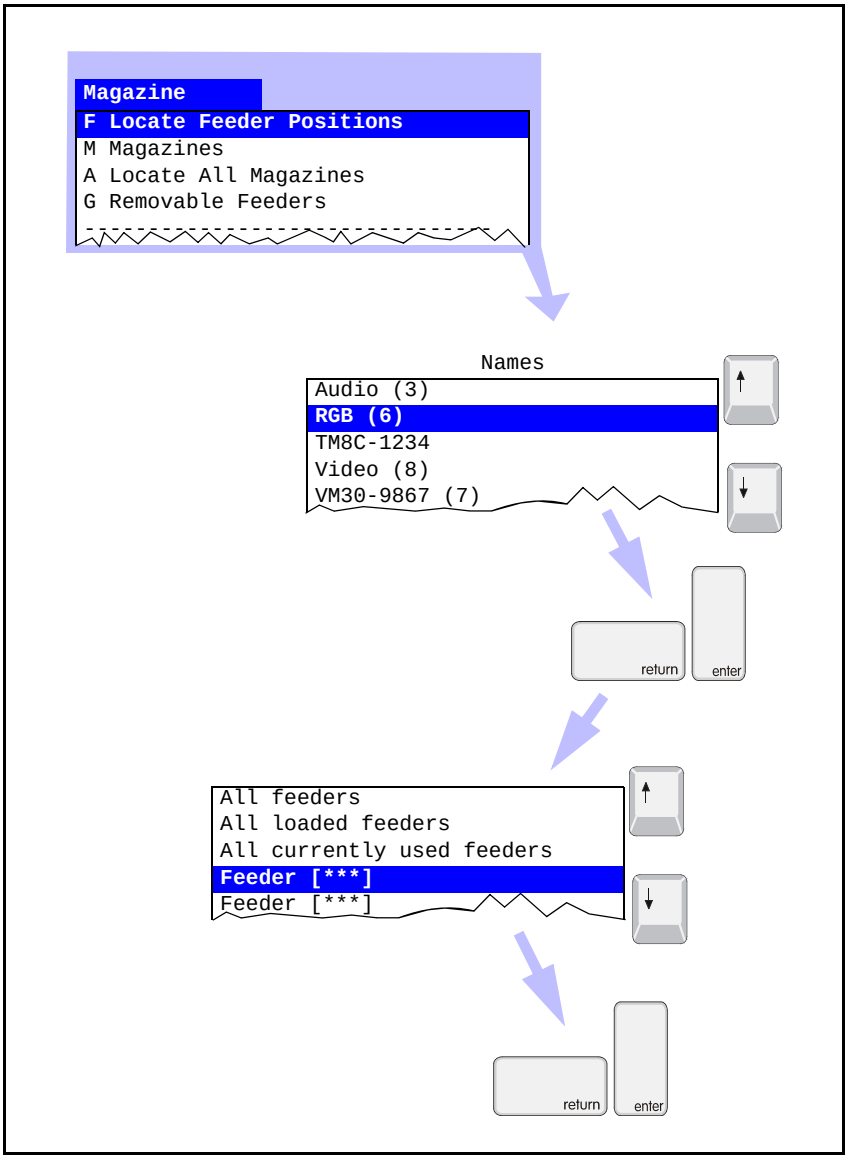

2. Center the cross hairs on the magazine's fiducial mark. Then on the component in the pick position.

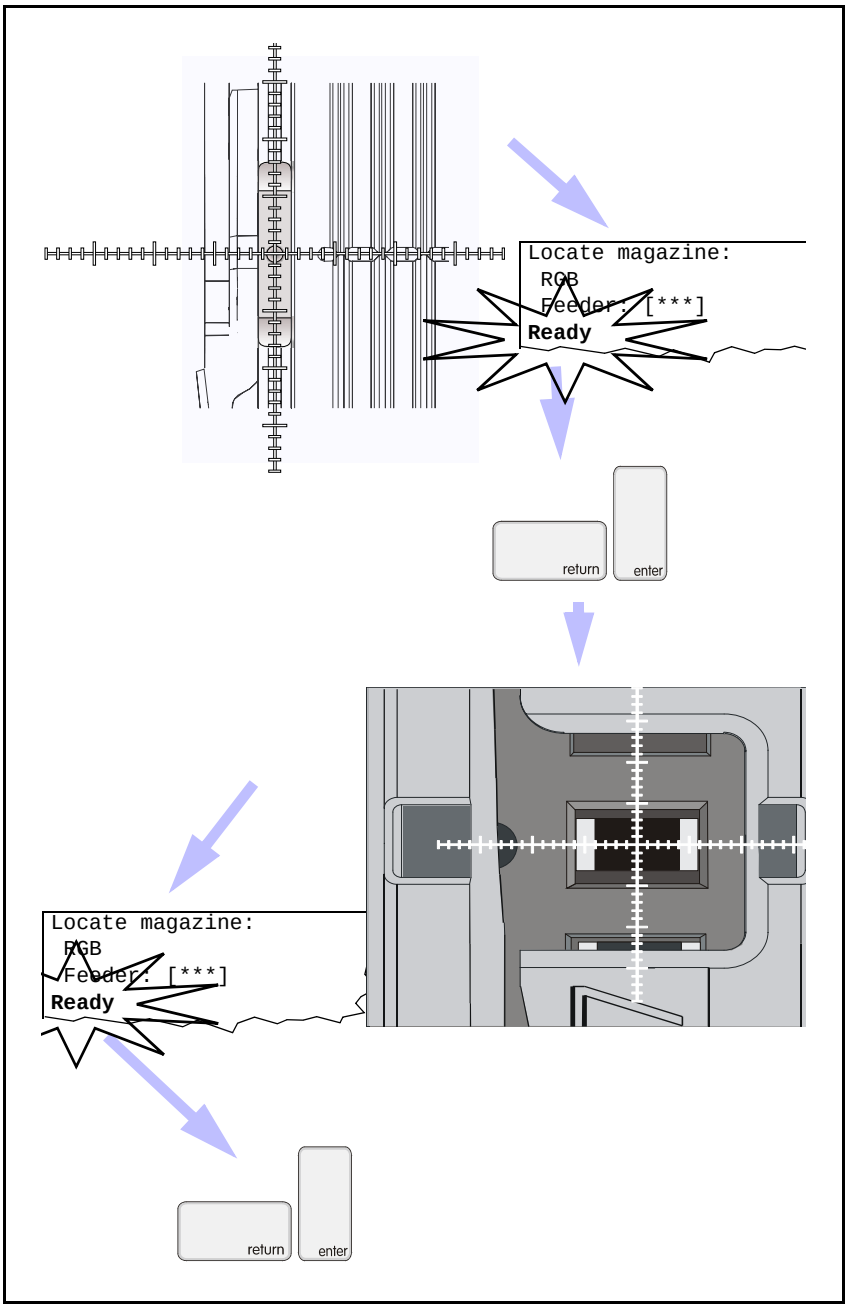

Step Four – Loading Layout

Prepare the machine's system, TPSys, for production. This is done by selecting a layout to produce as follows:

1. Select *Production* > *Load Layout*.

```
Production
A Assemble
T Locate Boards (Automatically)
M Locate Boards (Manually)
S Clear Layout Status
D Clear Management Data
-------------------------
L Load Layout
E Edit Layout
```

2. Select layout to produce.
3. Press <Enter> to load the layout.

Loading a layout automatically

1. Select *Production* > *Assemble*.
2. Scan the barcode.

   You can either use a handheld barcode scanner or a serial device mounted on a conveyor.

When the barcode is scanned, TPSys will automatically load the selected layout.

Step Five – Running the Job

TPSys now has all information needed to produce boards. The required components are loaded into the machine and the magazines have been located.

Start producing PCBs as follows:

1. Load the required boards and select *Assemble*.

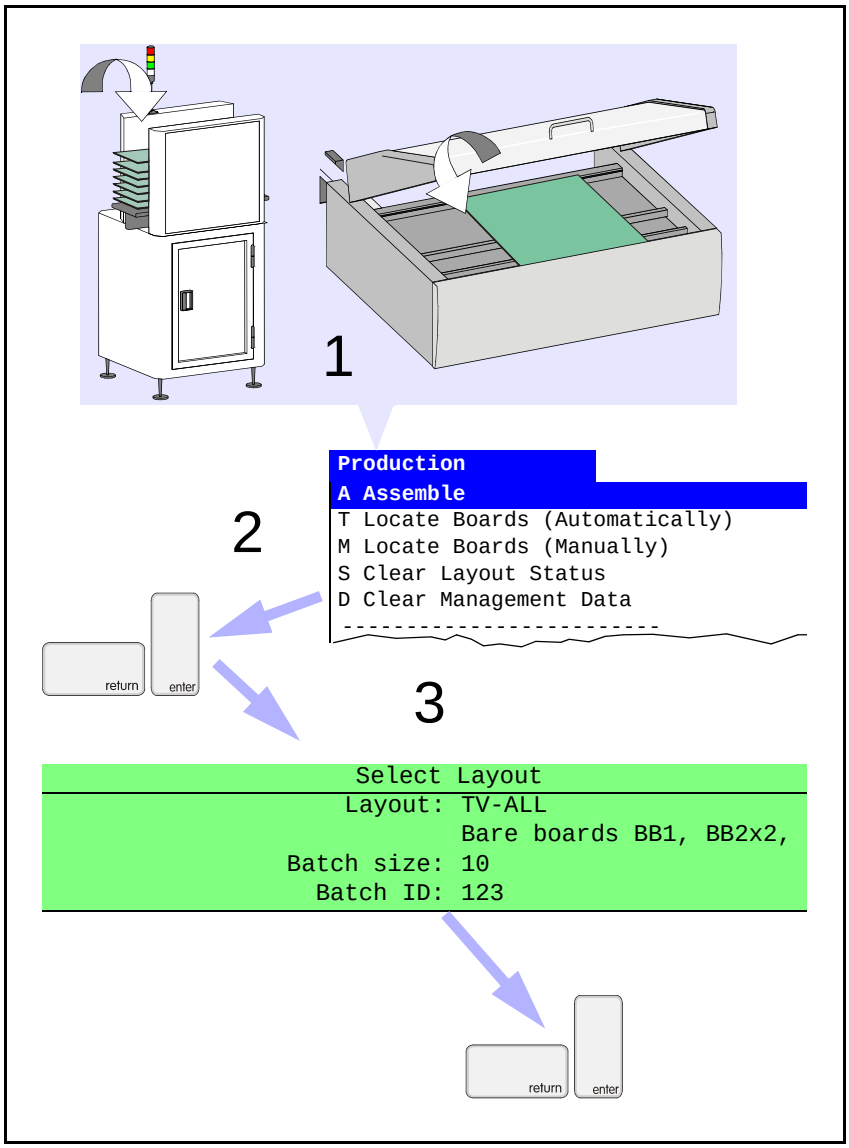

2. Select batch size measurement. It can be either *PCBs* or *Layouts* (default is *Layouts*).

Do not confuse batch size with number of boards. If a layout includes three boards and ten layouts are entered, a total of 30 boards will be assembled.

Step Six – Monitoring

While you are running a job, TPSys will monitor the progress and indicate if your attention is needed. The magazines and an optional signal tower will also help you to monitor the progress.

System Messages

In the main window a message box is shown that can display up to six system messages. You can show/hide this box by pressing <Shift> + <F2>. All messages start with a specific letter, and are shown in different colors to indicate their gravity:

I – Green

Information message, mostly feed-back about operations you have performed. For instance, magazine inserted.

W – Black

Indicates that something has happened that may need your attention. Machine operations can continue, though.

E – Pink

Error message. These messages need your attention. The machine can continue operations, but will soon stop.

F – Red

Fatal message, indicating that something has happened that will stop production immediately.

Magazine LEDs

The magazine LEDs will indicate if your attention is needed. The green LEDs ('1' in the figure below) will start flashing when a feeder is running out of components. If the green LED goes out and the yellow one (2) starts flashing, that feeder has a pick error. After a number of errors this feeder will shut down.The slot number turns red in a magazine utilization box.

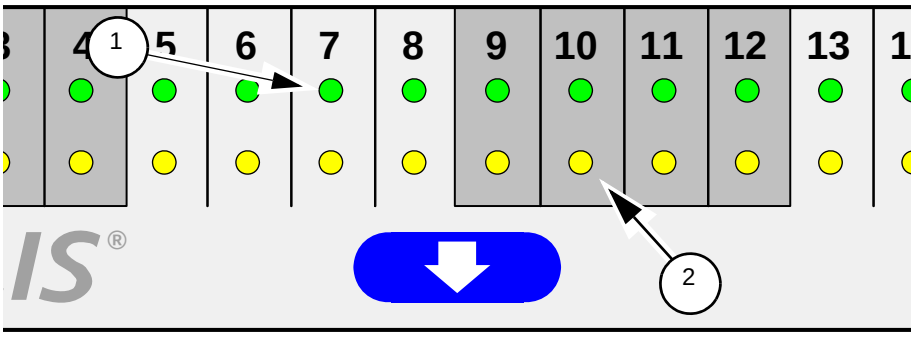

Signal Tower

An optional signal tower with red, yellow, green, and white light in addition to a buzzer can be used to indicate the operational status of the machine.

Signal tower default signals

Default signal	Machine state	Description
Green steady light.	Running	Normal mounting or gluing operation.
	Waiting	The machine is running but it waits for loading or unloading board.
Green steady light + yellow blinking + intermittent buzzer.	Bad performance.	The machine is running but components cannot be picked from at least one magazine feeder, which may be out of components. The same component type is however available in another magazine feeder.
	Stops soon.	The machine is running but components cannot be picked from at least one magazine feeder, which may be out of components. The layout will not be completely mounted.
Yellow steady light.	Idle/stopped.	The machine has not been started yet or: – it has finished a layout. – it is stopped by the operator.
Red steady light and buzzer.	Operator needed.	The machine cannot complete the assembly without help from the operator. Normally caused by lack of components.
	Error	The machine is stopped due to a fatal error or by an emergency stop button.
White steady light.	Power on.	The machine is turned on.

Alert Messages

Alert messages may turn up during production. Some of these are shown below. All messages are described in the *TPSys, Software Manual.*

Most alert messages are caused by bad location and/or missing components. Therefore, always check the following if you get an error message:

- Is the reel empty?
- Is the tray empty?
- Is the magazine or tray not located, or badly located?

Message examples and what to do if they appear:

[***] = Values

MONT-17: Component dimension [***] µm out of bounds ([***] - [***] µm)

Probable cause:

- Nothing in the feeder (measured by the tool).
- Picked component in an incorrect angle.
- Package tolerance too tight. Call a programmer.

MONT-19: Component lost (dimension = 0)

Probable cause:

- Nothing in the feeder.
- A pick fail has not been detected by the system.

MONT-26: Component lost (bad vacuum)

Probable cause:

- Acceleration codes set too high.
- Error in the vacuum system.

Step Seven – Changing Job or Shutting Down

When you have produced the last PCB in a job you can run a new job, leave the machine, or shut the machine down.

Changing job

Changing job in the machine can be prepared while you are running a previous job. Print out the *Layout Preparation* list. In that list you can quickly get information about the component status for the new job – if all components are already available in loaded magazines or not. If they are, just load the new layout into TPSys and start producing the new layout.

If you need to replenish, load a feeder and insert it into a magazine. Feeders can be prepared for both tape and stick magazines beforehand.

3. Machine Operation

The information in this chapter is intended for line engineers and other personnel needing full information about how to control the machine. The signification of a line engineer is described below.

This chapter contains descriptions of system basics that are necessary to know to be able to fully control the machine. This includes terminology, operating controls, system descriptions, and user access.

Signification of a line engineer

A line engineer has undergone special training and are authorized to carry out advanced activities, such as creating configurations and setting vision parameters.

Basic Terminology

A pick-and-place machine is designed to pick electronic devices and place them in the correct position on a printed circuit board (PCB). PCBs are found inside most electronic equipment, such as personal computers, video players, and so on.

X axis

MY100 pick-and-place machines are designed around a split-axis concept. Two high speed *X wagons* move along an X axis at the top of the machine, see Figure 3-1.

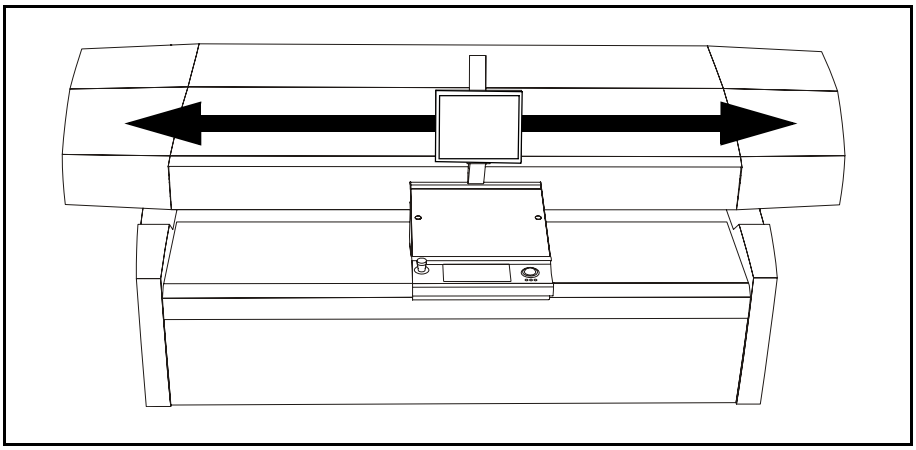

Figure 3-1. X axis.

Z axis

There are mount heads located on the X wagon. These can move up and down on a Z axis and also rotate. Tools for picking components are attached to these mount heads. There are two types of mount heads, a single mount head called Midas and a multi-mount head called HYDRA.

Y axis

There is an Y wagon that can move back and forth on an Y axis, see Figure 3-2. This holds the PCBs to be assembled.

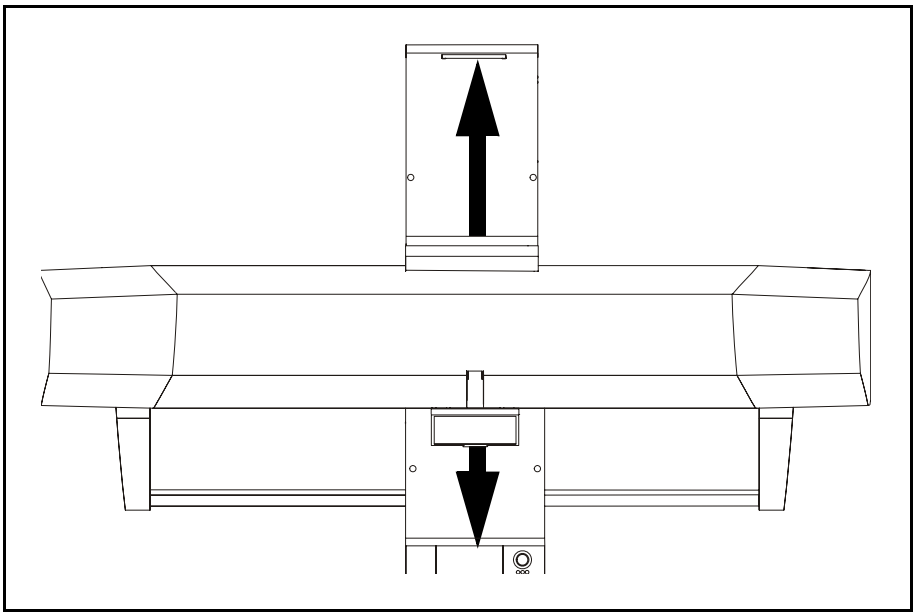

Figure 3-2. Y axis.

Component supply

Components are supplied in tape reels, component sticks (also called tubes), or on trays. These components are loaded into different magazine types that feed the components into pick positions in line with the X wagon movement path.

The various magazine types are separately described in Chapter 5 to Chapter 7. Figure 3-3 shows an example of a tape magazine.

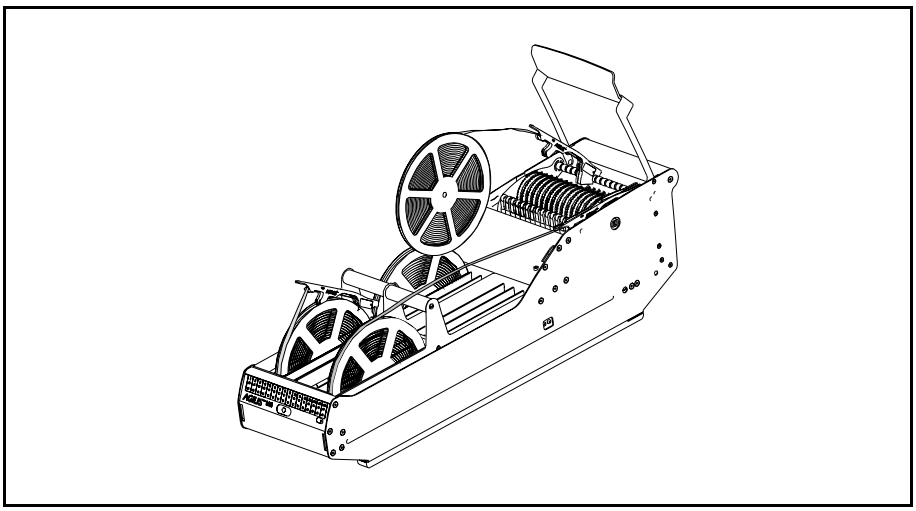

Figure 3-3. Tape magazine.

A Mount Cycle

- A magazine positions a component in the pick position.
- An X wagon moves above the magazine to the pick position.
- The mount head is lowered and a negative pressure is created in the mount tool that makes the component be sucked onto the tool nozzle.
- The mount head moves upwards with the component and the X wagon moves to the PCB on the Y wagon.
- A centering procedure is performed during this movement.

  This procedure is required to be able to place each component with a very high precision on the PCB.

  As component positions in tape pockets and on trays can vary, the component position on the tool nozzle must be corrected by being centered before placement. This can be done with either mechanical or optical centering, or both.

  Mechanical centering is performed by two centering jaws that push the component to the middle of the tool tip. The dimensions of the component can be measured by the jaws during this centering. So can also the electrical properties of the component.

  Optical centering means that the component position on the tool tip is measured by a vision system and the mount tool is compensated for the misalignment when the component is placed.
- During the pick-up and centering procedures, the Y wagon moves the PCB to the correct position for the component to be placed.
- Finally, the mount tool lowers and places the component in the correct position by increasing the pressure in the mount tool.

Machine Configuration

To load and unload PCBs, this machine can be configured with either an in-line conveyor system, or a manual load system. These systems are further detailed in Chapter 8.

A MYDATA machine can be an integral part of an in-line concept. This connects the internal conveyor on the Y wagon together with external conveyors. Empty PCBs can be loaded, transferred to the machine, aligned, have components mounted, and then be transported to an oven.

Magnetic vertical supports are used to prevent boards from flexing during assembly.

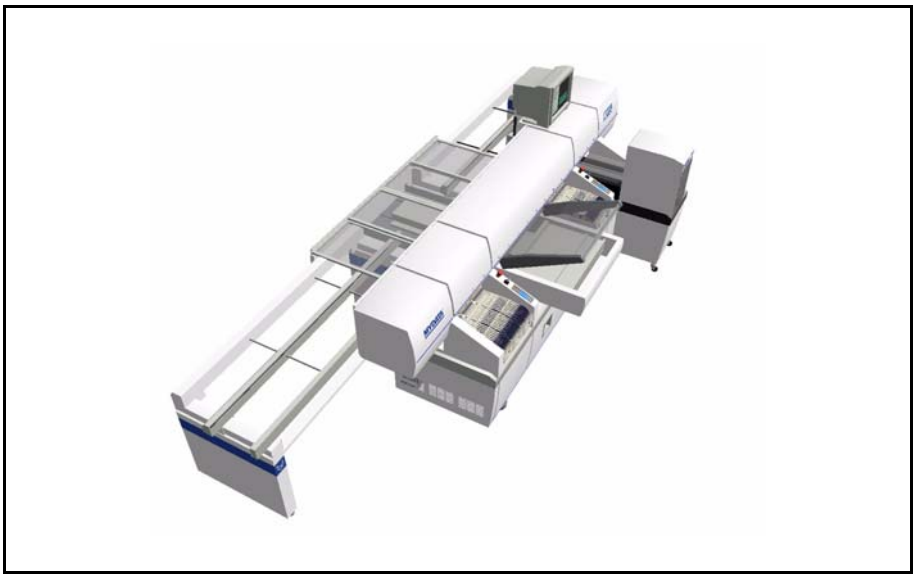

Figure 3-4. Tee style configuration.

With an optional manual load table adapter (ML3 – ML4) PCBs are fixed into position using magnetic supports. An ML3 – ML4 manual load adapter is installed onto the internal conveyor.

Any number of sizes or shapes of PCBs can be mounted simultaneously at any angles.

Operating Controls

MYDATA component placement machines are entirely processor controlled. All functions are controlled using keyboard and trackball. A monitor displays menus, current processes and messages. Some of the features can also be run offline.

The assembly process is controlled by a software called TPSys that takes information from numerous databases. This information specifies components, packages, magazines to be used, and where components are to be placed.

Mount programs, databases for components, packages, and magazines, as well as operating data and system parameters are stored on an internal hard disk. Assembly, magazine and user information can be shared by many MYDATA machines provided that these machines are equipped with a TPSys shared database option.

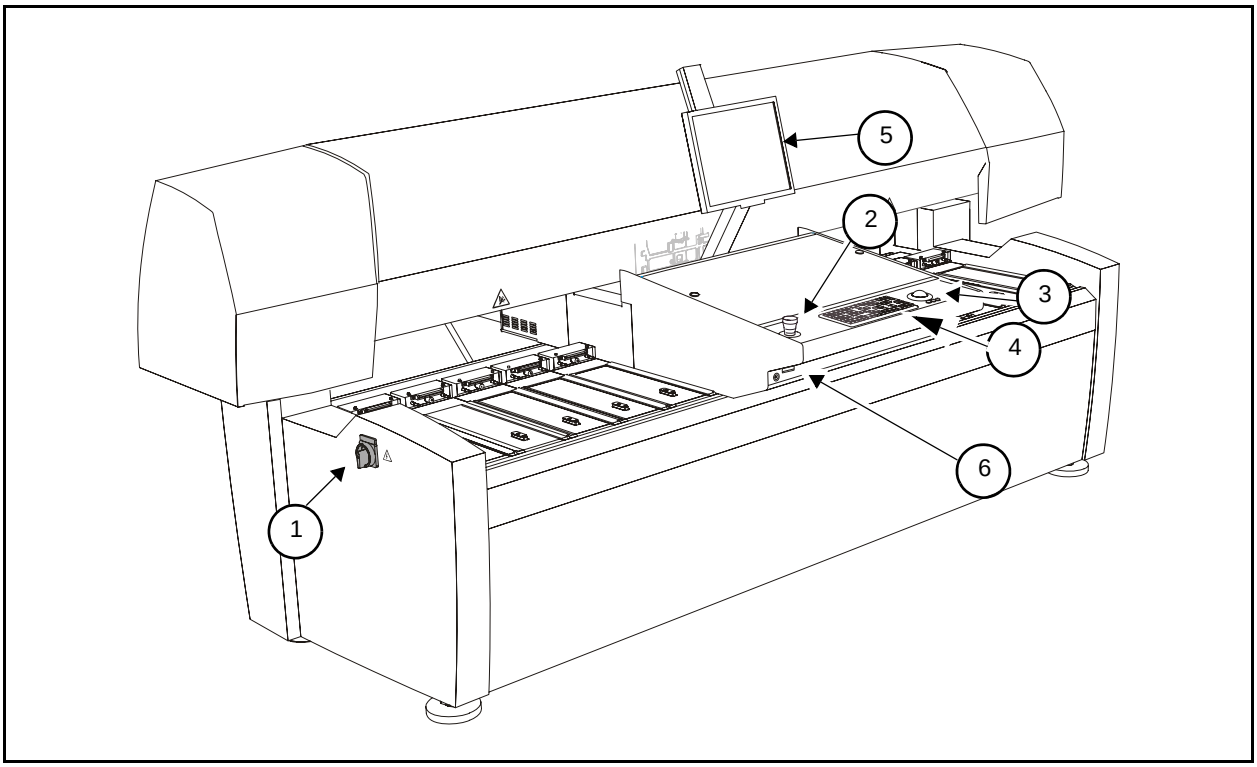

Figure 3-5. Machine controls.

Controls (pointed out in Figure 3-5):

1. Main power switch.
2. Emergency stop button.
3. Trackball
4. Keyboard
5. Monitor
6. ESD jack and USB port.

Trackball

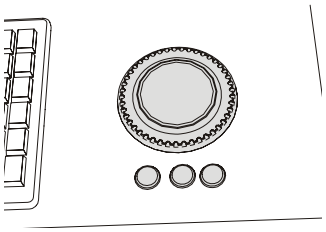

A trackball controls the X and Y movements of the machine. It is operational when the cross hairs are shown on the monitor.

The trackball buttons have the following functions:

- Pressing the left button restricts movements to the Y axis only.
- Pressing the right button restricts movements to the X axis only.
- Pressing both buttons will increase movement speed.

In some modes <F1> must be pressed to activate the trackball. A message is shown when this is the case.

Keyboard

A keyboard is used to handle menus, data entry, and programming. The keyboard has an alphabetical and a numerical section.

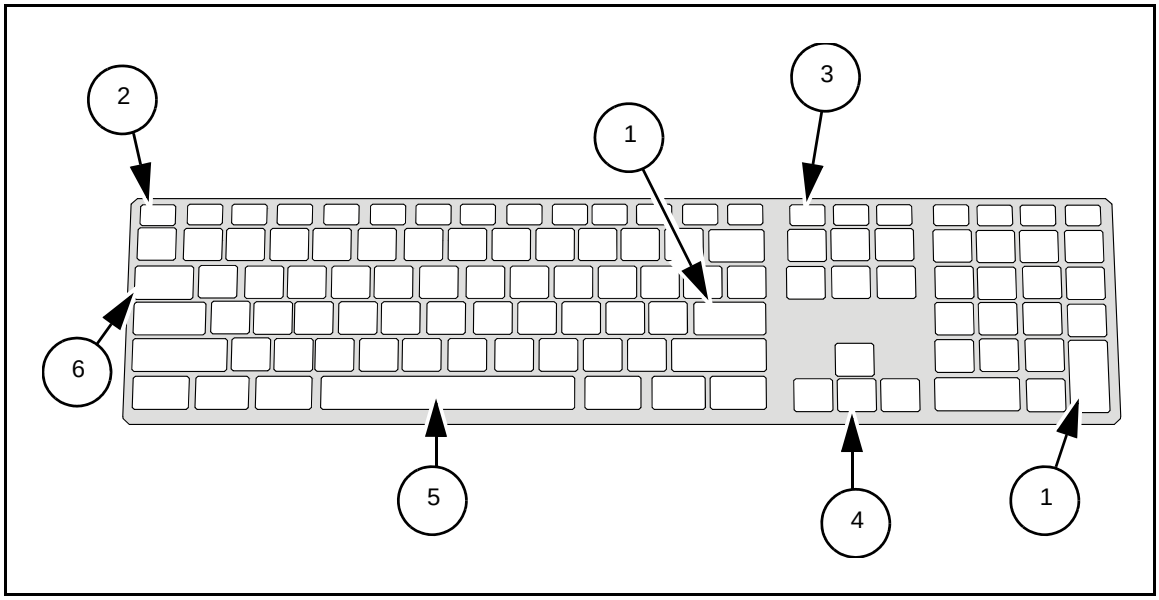

Figure 3-6. Keyboard

Special characters

National special characters cannot be entered from the keyboard. These characters and some other special characters are not allowed in the editors, for instance in board and layout names.

Vital Keys on the Keyboard

The following command keys are involved in most TPSys windows. Other command keys will be explained as they appear in various windows.

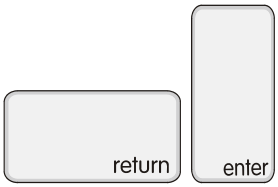

Enter or Return ('1' in Figure 3-6)

Pressing one of these keys means to confirm. In some cases they are used for special functions. When this is the case, instructions are provided.

In some editors, these keys are used to move to the next field, meaning that the previous field is confirmed.

These keys are called <Enter> on the screen and in the documentation.

Esc (2)

In contrast to <Enter>, this key is used to cancel the current activity without saving the data. It is also used to return to a previous window.

This key is called <Esc> on the screen and in the documentation.

F13 (3)

This key is used to insert new items in some editors and dialog boxes. It can also be used to toggle between insert and overwrite mode.

This key is called <Ins/F13> on the screen and in the documentation.

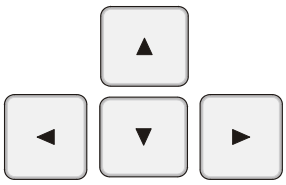

Arrow keys (4)

Generally, the arrow keys are used to move the cursor in the direction indicated by the arrow. This is used to select options in menus and to move the cursor in windows containing many fields.

Space bar (5)

The space bar is normally used for toggling between various selections in lists and other data fields.

The space bar is called <Space> on the screen and in the documentation.

Tab (6)

This key makes it easy and fast to navigate among some editors. Data in a selected field may refer to data found in another editor. Press this key to jump to that editor to make any necessary changes. Pressing <Enter> or <Esc> will return to the previous window.

This key is called <Tab> on the screen and in the documentation.

Signal Tower

An optional signal tower with red, yellow, green, and white light in addition to a buzzer can be used to indicate the operational status of the machine.

The combination of light and buzzer signals for various machine states can be customized to match individual needs. Configuration of the light and buzzer is further detailed in the *TPSys, Programming Manual*. The default setting is shown in the table below.

Signal tower default signals

Default signal	Machine state	Description
Green steady light.	Running	Normal mounting or gluing operation.
	Waiting	The machine is running but it waits for loading or unloading board.
Green steady light + yellow blinking + intermittent buzzer.	Bad performance.	The machine is running but components cannot be picked from at least one magazine feeder, which may be out of components. The same component type is however available in another magazine feeder.
	Stops soon.	The machine is running but components cannot be picked from at least one magazine feeder, which may be out of components. The layout will not be completely mounted.
Yellow steady light.	Idle/stopped.	The machine has not been started yet or: – it has finished a layout. – it is stopped by the operator.
Red steady light and buzzer.	Operator needed.	The machine cannot complete the assembly without help from the operator. Normally caused by lack of components.
	Error	The machine is stopped due to a fatal error or by an emergency stop button.
White steady light.	Power on.	The machine is turned on.

Disk Drives

This system uses an internal hard disk, an external CD-ROM drive, and USB ports for removable memories.

Hard Disk

The internal hard disk stores programs, parameters and various databases containing data for components, packages, magazines, mounting, layouts, fiducial marks, and glue dots.

CD-ROM Drive

The machine is equipped with a CD-ROM drive that is mainly used to install and update the TPSys software.

Removable Unit

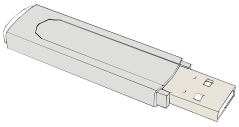

A removable memory, connected to a USB port, is used to make backups and to import/export data.

Printer (Optional)

An optional printer is used for producing hard copies of, for instance, component status, messages, management data, and parameter data.

Starting the System

About 15 seconds after the power has been turned on the first message is shown on the monitor. During the next minute approximately, when the Linux operating system is loaded, a number of messages are shown. TPSys is then loaded automatically.

Working in TPSys offline means that a reduced selection of menus are available and no activities in the machine can be started or stopped.

To manually start TPSys from an offline terminal type *go*.

If the system does not respond to commands, ensure that the keyboard is properly connected.

When the system is running, a dialog box with the following text is shown:

OK to initiate hardware?

CAUTION! Before initiating the machine, check the following:
You must understand the safety instructions before confirming this initiation.

Ensure that there are no foreign objects on the assembly table, near the tool bank, or within the X wagon, Y wagon, or Tray Wagon Magazine moving areas, and that the standard tool head and the HYDRA tools are in their upper positions.

Press <Enter> to confirm initiation. This will cause machine movements. The main window will be displayed on the monitor.

Occasionally, the system needs to be re-initiated to solve for instance an internal electrical, mechanical, or servo problem. The following message can thus be shown even after the start-up initiation:

OK to initiate hardware?

If this happens, ensure it is safe to operate the machine, confirm the initiation, and continue assembling.

Messages On Startup

You may encounter a couple of service related messages on startup of the machine.

2000 hour service

At startup, the system will warn if a major 2000 hour service is due. Please, contact your service representative as soon as possible if this message is shown.

You may select to do this operation later. This message will, however, appear every time you start the machine until it is confirmed that this action has been performed. Only a person with service authorization can clear such a 2000 hour service message, after performing the service.

X wagon linear guide lubrication

The X wagon linear guide rails need lubrication regularly. The system will monitor this, and warn when the rails are due for lubrication. Please refer to the machine manual for more information on this process.

You may select to do this operation later. This message will, however, appear every time you start the machine until it is confirmed that this action has been performed.

X wagon linear guide replacement

This message indicates that a replacement of the X wagon linear guide is due. This message will appear when the linear guides should be replaced within 30 days. Please, contact your service representative as soon as possible if this message is shown.

Manual Insertion/Removal of Tools or Components

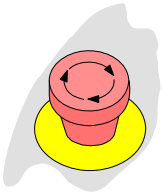

The emergency stop button shall be pressed down when a tool or component is manually inserted or removed from the X wagon of the machine.

In addition to the safety instructions found in this manual, follow any safety information displayed on the screen.

Do not start, operate or service the machine until you have read and understood the safety chapter.

TPSys Main Window

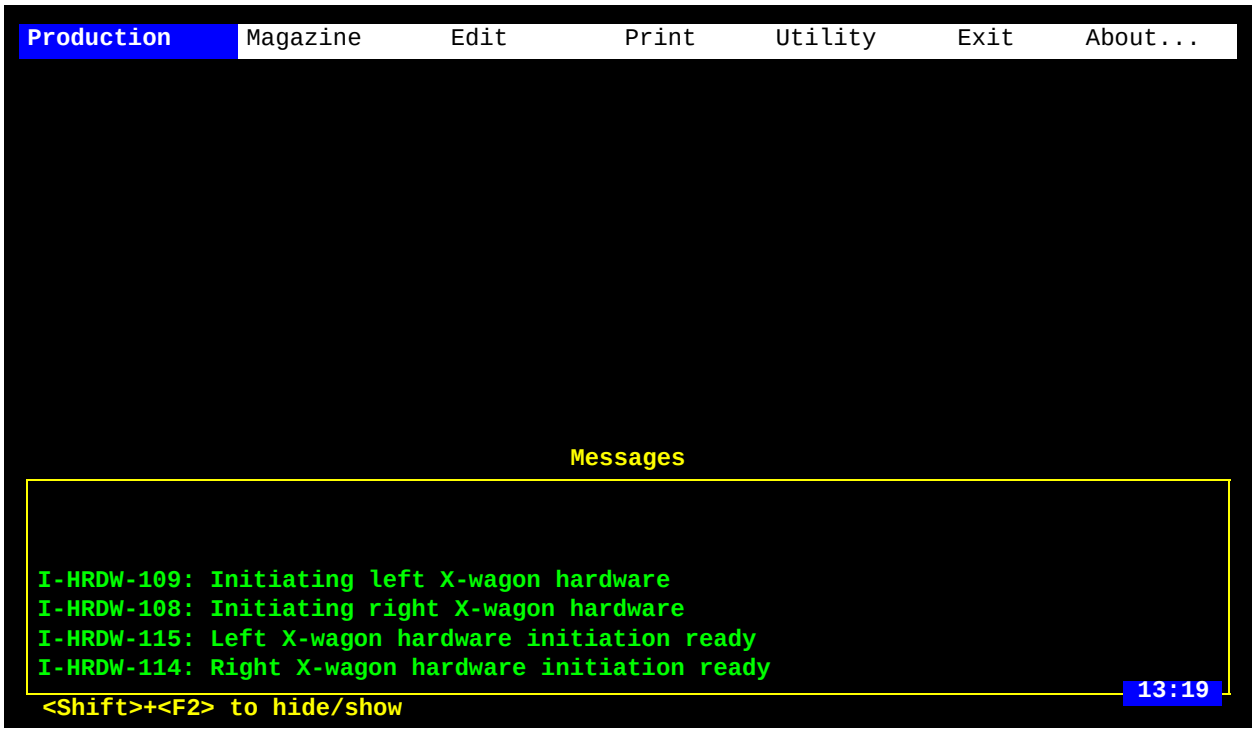

Figure 3-7. Main window.

The menu in the main window, see Figure 3-7, has a number of options, one of which is selected (highlighted). The selection is moved by pressing an arrow key.

The options in the main menu window have sub-menus that are shown if <Enter> or <down arrow> is pressed. You can also select an option by simply pressing a shortcut letter. You can use either upper-case or lower-case letters.

The *Production* menu options are shown below.

Main Menu Options

In the main window there is a menu bar in the upper part of the window. You can select various commands from this menu. The *Production* menu is shown in the figure.

```
Production
A Assemble
T Locate Boards (Automatically)
M Locate Boards (Manually)
S Clear Layout Status
D Clear Management Data
-------------------------
L Load Layout
E Edit Layout
U Unload Layout
X Layout Status
-------------------------
V View Messages
- Set Message Time Mark
W Switches
I Mount/Glue Switches
-------------------------
Y Move Y Wagon
C Conveyor Control
O Leave Tool
```

The commands are selected by moving the highlight with the <up arrow> key or <down arrow> key and pressing <Enter>, or by simply pressing the shortcut letter, either in upper-case or lower-case letter.

In some cases there are also sub-menus.

Editor Windows

Information in TPSys is shown and edited in editor windows.

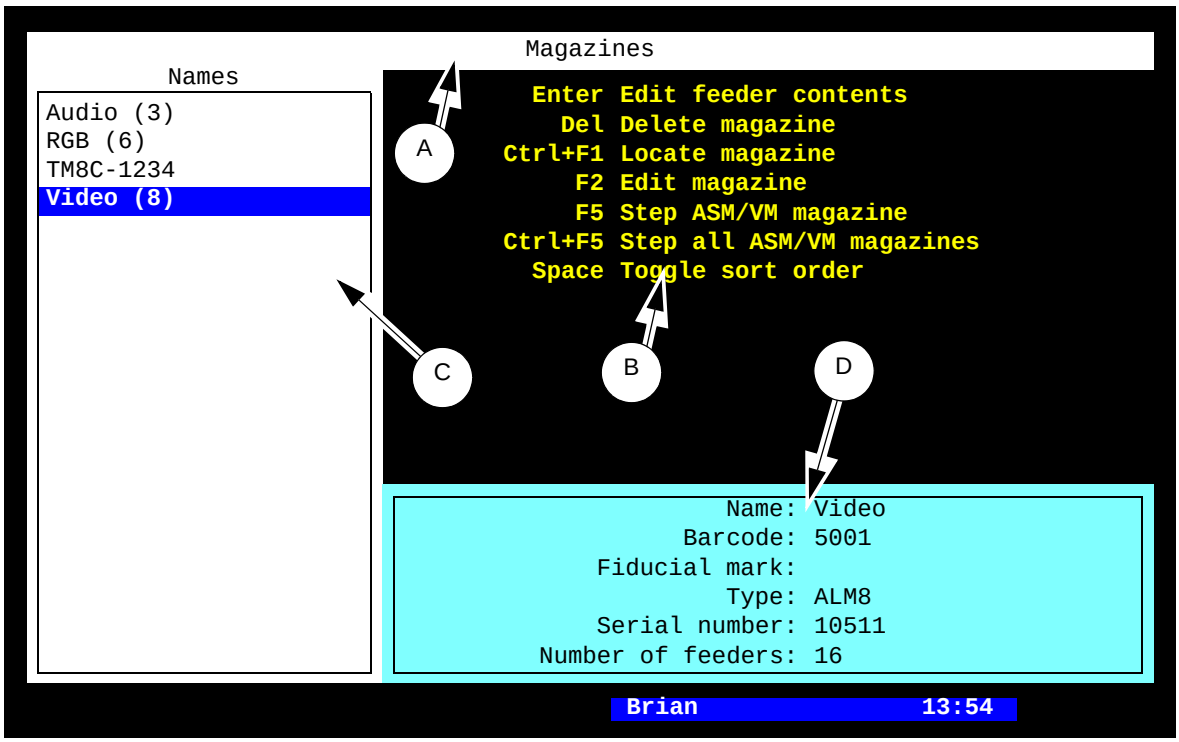

Figure 3-8. TPSys editor window.

Generally these editor windows have the same layout with the following sections:

Title bar ('A' in Figure 3-8).

Most data boxes and lists also have titles.

Command keys (B).

Some command keys, such as <Enter>, are always present in the various windows. See page 3-7 for details. Other command keys will be explained as they appear in various windows.

List (C).

Use the arrow keys, <PgUp>, <PgDn>, <Home>, or <End> to select in the list. You can search in the list by typing the first characters of an entry name.

Data box (D).

This box contains data for the selected entry in the list. You can move between data fields by using the arrow keys or <Enter>.

Sometimes, the information in a field is generated in another editor. For instance, a component has a package and you want to change this information in the component editor. Select the package field and press <Tab> to access the package editor. Select new data and press <Enter> to come back to the previous component editor.

In some windows and fields a certain key will open a menu in which an option can be selected. The figure shows an example of a menu in which a HYDRA tool can be selected.

Confirming and Canceling Commands

Example 1, Confirming a command

- From the main window, press *U* or, using the arrow keys, move the highlight to *Utility* and press <Enter> or <down arrow>.
- Press *U* or, using the arrow keys, move the highlight to *Units* and press <Enter>.
- Using the arrow keys highlight the *Inch* option.
- Confirm the command by pressing <Enter>.

Now, the system will display measures in inch.

Example 2, Canceling a command

- From the main window, press *R* or move the highlight to *Print* and press <Enter> or <down arrow>.
- Press *M* or move the highlight to *Magazine* and press <Enter>.
- Highlight the *Print Selected Magazine* option.
- Press <Enter>.
- Cancel the command by pressing <Esc>.

The command procedure is canceled and the main window is shown again.

Camera View

In some modes, a real time camera view is shown. This is, for instance, used to manually locate fiducial marks.

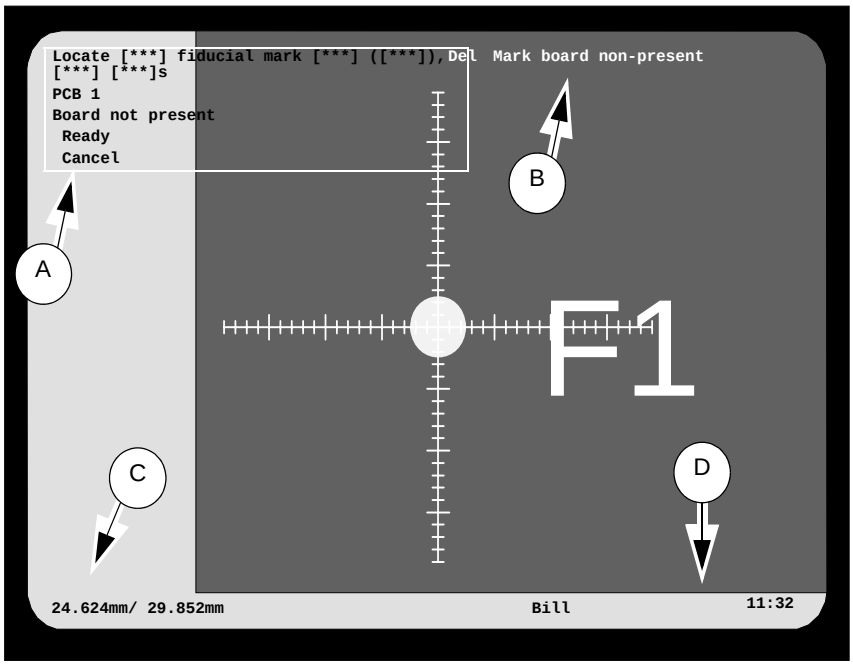

Figure 3-9. Camera view.

The screen will show various commands and information that are relevant for camera operations. In the middle of the screen you will see cross hairs that makes it easy to position the camera accurately. In some windows there may be other graphics, for instance showing the outline of a fiducial mark.

Sections included in a camera view:

Commands ('A' in Figure 3-9).
Available special commands (B).
Coordinates (C).
Status bar (D).

Pressing <Ctrl> + T when you are in a camera view will clear the screen from text. This makes it easier to inspect details in the image.

TPSys Web Interface

It is possible to activate a TPSys web interface. This interface will, in many cases, show the information in a more convenient way. For instance, it provides graphical presentations of assembly data. It can also be used to print out various reports.

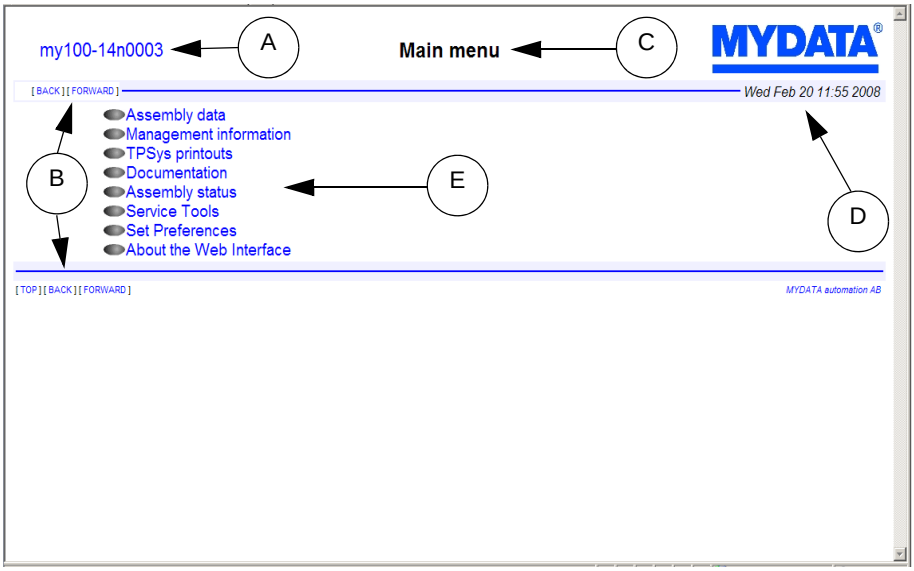

To access the TPSys web interface, press <Alt> + <F2>.

Sections included in a web interface window:

Machine name ('A' in the figure above).
Navigation buttons (B).
Web page title (C).
Status bar (D).
Menu options (E).

To get back to the TPSys window, press <Alt> + <F1>.

Messages

The main window has a message box that can display up to six system messages. You can show/hide this box by pressing <Shift> + <F2>.

More messages are, however, stored in the system and can be displayed in a full screen window shown by selecting *View Messages* in the *Production* menu.

Use the <up arrow>, <down arrow>, <PgUp>, and <PgDn> keys to scroll the text for further messages, if any.

Return to the main window by pressing <Esc>.

Messages can be printed out by selecting *Messages* in the *Print* menu. You can choose to print all existing messages or messages from a specific period defined by the *Enter time in minutes* prompt.

A complete list of messages that can be shown in this window is found in the *TPSys, Programming Manual*.

User Access

The system can be set up with a user access system to prevent from unauthorized access. Unauthorized alteration of data may ruin the work and change the behavior of the machine.

Each user can be set up with a personal password and an individual access level. Information on how to set up the user access is found in the *TPSys, Programming Manual*. It is recommended to use this feature to keep a high safety level.

Logging On

When using the access feature, everyone has to log on with a password. To be able to change vital data or parameters, passwords need to be assigned high access rights.

To log on, enter your name and password when prompted.

After a successful logon the user name is displayed on the screen.

No access right

The following information is shown if you have no access right or no right to modify data:

This is applicable if the user access is on, and you are not logged on, or, you have logged on with no access right for the current feature.

Logging Off

If you want to log off without exiting TPSys, select *Exit* > *Log Off*, and then *Yes* in the dialog box.

Exiting the System

CAUTION! Never turn the power off while the TPSys is running.

To exit, shut down the system, or restart the system, use the *Exit* menu.

For further details on the *Exit* menu, see *Appendix A – Menu Reference Guide*.

As you exit TPSys, you are automatically logged off.

If you have selected *Shutdown*, the machine will go through a shutdown procedure. It is safe to turn the machine power off after a message is displayed stating that you can press <Ctrl> + <Alt> + <Del> to reboot.

4. Assembling

This chapter is a quick guide on how to assemble a layout. You can start producing if the required components are available and all programming has been done.

Assembling a layout means to perform the following steps, which are described on the following pages in this chapter:

- Layout preparation.
- Loading components (see the magazine chapters).
- Applying magazine kit (optional).
- Locating pick positions (see the magazine chapters).
- Loading layout.
- Loading boards.
- Locating boards.
- Assembling the layout.
- Be observant for alert messages and pick errors.

Board and layout programming is not included in this manual. Please see the *TPSys, Programming Manual* for information about how to program boards, panels and layouts.

To be able to perform some of the steps above you will need further information about the system. That information is found in the following chapters in this manual:

- Chapter 5, *Tape Magazines*
- Chapter 6, *Stick Magazines*
- Chapter 7, *Tray Magazines*
- Chapter 8, *Board Handling*
- Chapter 9, *Tools and Tool Banks*
- Chapter 10, *Glue Station*
- Chapter 11, *Operational Features*
- *Appendix A – Menu Reference Guide*

Layout Preparation

Before you start assembling, you should check things like required components for the layout, tools, and so on. In TPSys there is a *Layout Preparation* report feature that helps you to get information about which components are needed. A report can be generated and printed offline. You may also use the TPSys web interface to produce this report.

The report shows information about the components in the layout. It will tell you if components cannot be mounted. Ti tells also the reasons for that, which can be:

- A component is not found in any of the inserted magazines.
- There is no available mount tool for a component.
- The glue feature is off when components are to be glued.

To create a layout preparation report:

1. Select *Print* > *Layout Preparation*.
2. Select one of the following options:
   - *Layout*
   - *Batch size*

   The *Batch size* can either be set to *Indefinite*, or the number of layouts typed into the field. If no batch size is specified, there will be no component shortage warnings in the report.

   The *Layout Preparation* report is printed out.

If there is a missing component type, a column named *Stock location* in the report informs about the store location for it. This information is entered in the *Components* window, see the *TPSys, Programming Manual* for details.

Loading Layout

Layouts can be loaded either manually or automatically.

Loading a Layout Manually

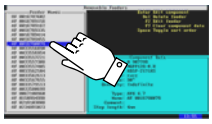

1. Select *Production* > *Load Layout* in the main menu.

   A layout list, containing all stored layouts in the system, is displayed.

2. Select layout by using the arrow keys, or simply type the first characters of the name.

3. Press <Enter> to load the selected layout.

Loading a Layout Automatically

1. Select *Production* > *Assemble*.

2. Scan the barcode.

   You can use either a handheld barcode scanner or a serial device mounted on a conveyor.

When the barcode is scanned TPSys will automatically load the correct layout.

Loading Boards

Boards can be loaded either from a conveyor system or manually on a manual load table.

From conveyor

If the machine is equipped with a conveyor system, boards are loaded automatically as follows:

- Select the *Conveyor Load/Grab* option in the *Production* menu.

On a manual load table

If the machine is equipped with a manual load table, you have to load manually as follows:

- Move the Y wagon to the front position in one of the following ways (if it is not already in this position):
  - Press <Ctrl> + Y on the keyboard.
  - Select *Production* > *Move Y Wagon* > *Front Position*.
- Place the boards included in the layout on the manual load table.

  If you want to save time when locating the boards, place the boards in the same way as last time the layout was used.

Do not mix boards of different thickness in the same layout.

The TPSys web interface may show the correct orientation of a board. The graphic presentation shows boards oriented the same way as they traveled through the machine the last time the layout was produced.

Locating Boards

Select *Production* > *Locate Boards (Automatically)*.

This will start an automatic fiducial mark search.

Set the following switch to *Yes*: *0013 Remember non-present board flags* in *1002 Assembly switches.*

This will not remove non-present markings. Please see Appendix A for further switch details.

Automatic and manual board location is further described in Chapter 11.

Assembling the Layout

1. Select *Production* > *Assemble*.
2. Select layout in the dialog box shown.
3. Enter the number of layouts in the batch and a batch name, if any. You can set *Batch size* to *Indefinite*.

   Do not confuse batch size with number of boards. If a layout contains three boards, ten layouts will make a total of 30 boards to assemble.

CAUTION! Ensure that there are no foreign objects on the assembly table, near the tool bank, or within the X wagon, Y wagon, or Tray Wagon Magazine moving areas, and that the single mount tool head and the HYDRA tools are in their upper positions.

Other options in the assembly menu are described below.

4. Select *Start Assembling* in the menu shown.

   The machine will start assembling.

If the machine is equipped with a conveyor system, it will automatically change boards when ready.

If the machine is equipped with a manual load table, the machine stops after finishing the first layout. It will then prompt for board change.

During assembling the system will show statistics, that is number of layouts and PCBs produced.

Alert messages may turn up during assembling, informing about components that cannot be mounted and other notable events, see below.

You can stop the assembling by pressing the <Enter> key on the keyboard.

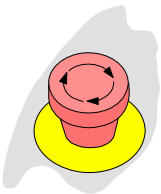

IMPORTANT
In case of emergency, all machine movements can be stopped immediately by pressing an emergency stop button down.

Other options in the assembly menu

Clear Non-Present Flags

Clears non-present board markings set during manual fiducial mark search.

This feature is further described in Chapter 11.

Glue Boards

Glue is applied for components for which the *Glue* field is set to *Yes* in the *PCB Items* window.

Select this option to only apply glue, see Chapter 11.

Mount Boards

Components are mounted on the boards included in the current layout without glue, as no gluing is performed with this option.

Print Management Data

Prints management data, see Chapter 11.

View Alert Data

This option opens an alert data box displaying, for example, in which magazine missing components are loaded.

Select the desired component in the *Operator Alerts* box. Magazines and feeder numbers for missing components are shown. For components on trays, the magazine position, pallet names and feeder numbers are shown.

To print the operator alerts, follow the instructions on the screen.

Locate Boards (Automatically)

Performs an automatic fiducial mark search. See Chapter 11.

Locate Boards (Manually)

Performs a manual fiducial mark search. See Chapter 11.

Clear Layout Status

Clears saved layout status, if exists. See Chapter 11.

Print Alert Data

Prints out the alert data.

Alert Messages

If an error occurs, or a magazine runs out of components, an alert message will be displayed.

[***] = Component name.

```
                    Operator Alerts
Unknown component [***]
Component [***]: Running low
```

```
                Magazine Utilization
TW 2 3 | 4 5 6      YW      10 11 12 | 13 14
```

Entries in the alert message box contain component names and comment text, and the reason to why a component cannot be mounted.

You can also see in which magazine or tray missing components should be loaded by selecting the *View Alert Data* option in the *Assemble* menu, see above.

More messages are, however, stored in the system and can be displayed in a full screen window by selecting *View Messages* in the *Production* menu, or *View Messages* in the *Hot Menu*, see below.

LEDs on magazines are coordinated with alert messages. See the chapters about magazines for more information.

There is a *Magazine Utilization* bar below the *Operator Alerts* box. This is described on page 4-9.

You can stop the assembling by pressing the <Enter> key on the keyboard.

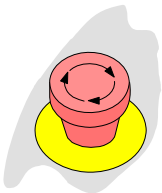

IMPORTANT
In case of emergency, all machine movements can be stopped immediately by pressing the emergency stop button down.

View Message Log

If you want to see messages without leaving the assembling mode you can use the hot menu, see below. It is opened by pressing <F10>.

Hot Menu
Reset Magazine Errors
Load Layout
Unload Layout
Clear Layout Status
Locate Feeder Positions
Locate Boards
Grab/Release Board
Move Y Wagon Front/Back
Leave Tool
Magazines
Y-Wagon Magazine
Tray Wagon Magazine
TEX Magazine
TEX Units
Components
Packages
Fiducial Marks
Parameters
Switches
Mount/Glue Switches
HYDRA Tool Utility
Select Unit
View Messages
Set Message Time Mark

To open the *Messages* window, select *View Messages*.

To close the *Messages* window, press <Esc>.

Magazine Utilization

There is a *Magazine Utilization* bar below the *Operator Alerts* box.

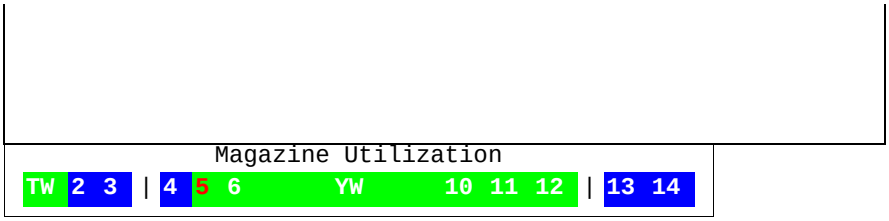

The main purpose of the *Magazine Utilization* bar is to point out those magazines which contain components for the current layout. This feature makes it easy to check if any of the magazines are not needed for the current layout and thus can be removed. In addition, the *Magazine Utilization* bar gives information about inserted magazines and magazine status.

The magazine utilization information is continuously updated, even when the machine is not assembling.

Character key

1–14	Magazine positions, which can be from 1–10 to 1–14 depending on the machine type.
|	This line indicates a machine frame.
YW	Y wagon, Y-wagon magazine.
TW	Tray wagon magazine.

Color key

White background indicates that the magazine position is empty, or has a buttoned out magazine.

Green background indicates that the magazine contains components for the current layout.

Blue background indicates that the magazine position is occupied but it contains no components for the current layout.

5 Red position number indicates pick error.

Pick Errors

Pick errors can be caused by, for instance, empty magazines, rejected components, or not enough negative pressure in the tool.

If an error occurs, a number of attempts to pick and place the component are done. If this fails, the magazine must be withdrawn from the machine for refilling or solving of the problem.

Recorded errors for a particular magazine are cleared by:

- Pressing <F5> if no physical manipulation of a feeder is needed. This may be the case if it is a programming error. <F5> is available when you edit feeder contents for tape, stick, and tray magazines.
- Withdrawing and re-inserting that particular magazine.
- Pressing the magazine release button.

All recorded magazine errors can be cleared by selecting *Reset Magazine Errors* in the hot menu or in the *Magazine* menu.

After a reset procedure, the system makes new attempts to pick and place all components.

5. Tape Magazines

There are three different tape magazine families for MYDATA pick and place machines:

- Agilis

  Magazines in the Agilis family use removable feeders. A removable feeder is an intelligent unit, which can be loaded with a component tape before it is inserted into the magazine. It makes loading and reloading of components fast and easy. You can load feeders while the machine is running. Removable feeders are easy to move from one feeder position to another, as well as between magazines.

- TM

  The TM magazine family is an older tape magazine type with fixed feeders. This magazine type is available for tape sizes from 8 mm to 56 mm.

- TM Flex

  Magazines in the TM Flex family provide a flexible, non-permanent configuration. They allow a mix of various feeder sizes in the same magazine. Tape is loaded and unloaded in the same manner as in TM magazines.

This chapter describes these three magazine types and how to use them, including how to update TPSys and adjusting pick positions. But, before that, a few words about component tape.

Component Tape

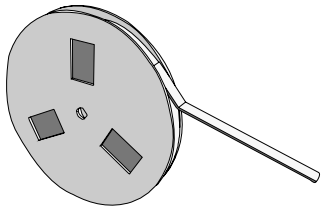

Component tape consists of a carrier tape with embossed cavities for storing individual components. A cover tape seals the components. This composite tape is then wound on a reel. Tape and reel assemblies provide component isolation and the tape is designed for small surface mount packages, for instance SOT.

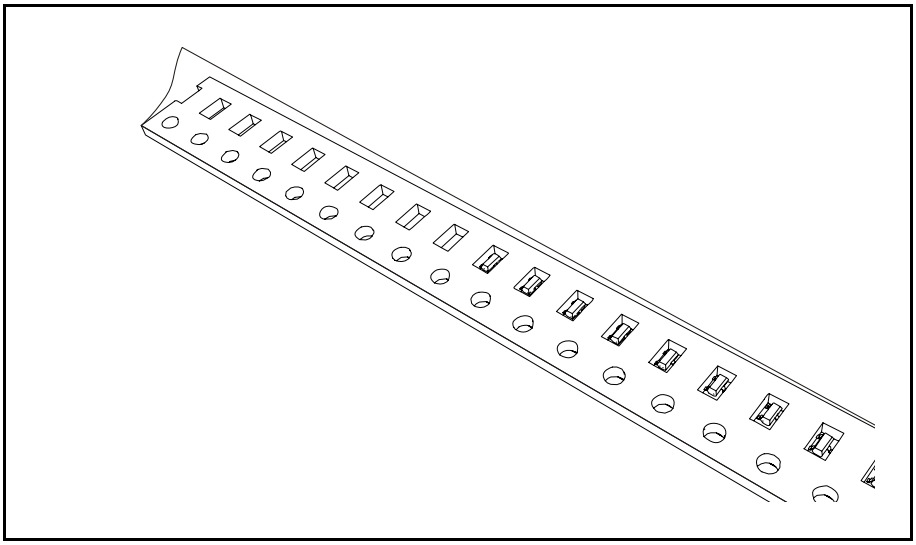

Figure 5-1. Component tape.

Tape Seal

A plastic tape seal is available for re-sealing tape. This will make handling of tape, removed from feeders, more secure.

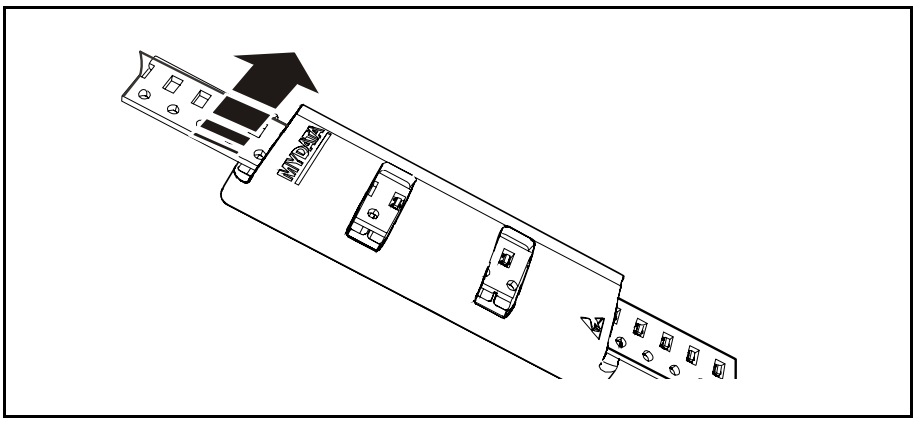

Figure 5-2. Tape seal.

Tape seal is used as follows:

Slip the seal onto the tape. Be sure to attach it between pockets and from the left side. The tape seal will now protect components left in pockets.

Agilis Magazines

There are three types of Agilis tape magazines:

- Agilis M8 (AM8).
- Agilis Linear Magazine 8 (ALM8).
- Agilis Linear Magazine 1216 (ALM1216).

All these magazines use removable feeders. The AM8 and ALM8 types have each a capacity of 16 reels and feeders for 8 mm tape. The ALM1216 type has a capacity of 8 reels and feeders for 12 and 16 mm tape, which can be mixed freely within the magazine.

Mechanical adjustment of the pick line is not needed for the ALM8 and ALM1216 magazines.

Selecting Agilis Feeder

An Agilis feeder is an intelligent, removable unit, in which component tape is loaded before inserting it into the magazine. It is easily moved from one feeder position to another.

Each feeder has a barcode with a unique ID number, the latter stored in an electronic part inside the feeder, see Figure 5-3. TPSys uses this part to identify the feeder and the magazine position used. TPSys also connect this information to the loaded type of component (described later in this chapter).

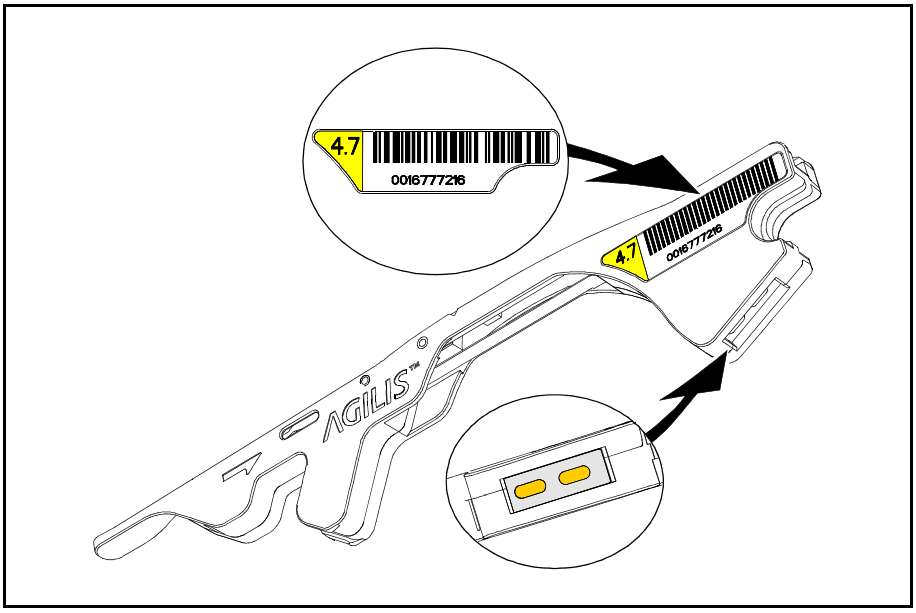

Figure 5-3. Feeder barcode and electronic part.

For each component tape width, there are several Agilis feeders for different cover tape widths.

There are fixed sizes classified after different cover tape widths. The feeder type numbers for these are the same as the exposed cover tape widths in mm (Agilis feeder 4.7 has an exposed cover tape width of 4.7 mm).

There are also adjustable feeder types classified in the same way, but after the exposed cover tape width span.

The mechanical main difference between these types is the width of a rail that strips off the cover tape from the component tape.

The reason for this is that cover tape for different components and from different suppliers varies in width. To make sure the cover tape is completely stripped, it is necessary to choose an appropriate feeder.

The following Agilis feeder types are available when this manual is published:

3.7	Green	Very narrow rail.
4.0	White	Narrow rail.
4.7	Yellow	Standard rail.
5.4	Red	Wide rail.
8.5	Yellow	Standard rail for 12 mm tape.
12.5	Yellow	Standard rail for 16 mm tape.
3.7–5.5	Black	Adjustable rail, 3.7 mm to 5.5mm for 8 mm tape.
7.5–9.5	Black	Adjustable rail, 7.5 mm to 9.5mm for 12 mm tape.
11–13	Black	Adjustable rail, 11.0 mm to 13.0mm for 16 mm tape.

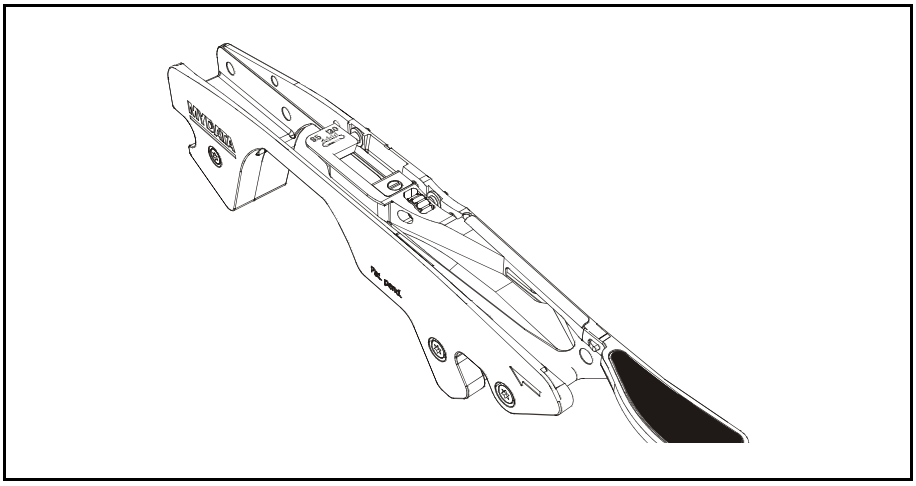

Figure 5-4. Adjustable feeder.

The recommended feeder types for common packages and tape widths are found in the following table.

Tape width	Component package	Agilis feeder 8 mm					Agilis feeder 12/16 mm			
		3.7	4.0	4.7	5.4	3.7–5.5	8.5	7.5–9.5	12.5	11–13
8 mm	01005*	•								
	0201*	•								
	0402	•	•							
	0603		•							
	0805			•						
	1206			•						
	1210			•						
	MELF 2012			•						
	MELF 3514				•					
	SOT-23			•						
	SOT-143			•						
	Odd size tapes					•				
12 mm	1812						•			
	2010						•			
	2220						•			
	2225						•			
	2512						•			
	MELF 2308						•			
	M4726						•			
	M4733						•			
	M5437						•			
	M6032						•			
	M7343							•		
	SOT-89						•			
	SOT-223						•			
	SO-4						•			
	SO-8						•			
	MSOP10						•			
	SSOP14						•			
	SSOP16						•			
	TSSOP8						•			
	TSSOP14						•			
	TSSOP16						•			
	Inductor 1812						•			
	Array 1206x4						•			
	Odd size tapes							•		

Tape width	Component package	Agilis feeder 8 mm					Agilis feeder 12/16 mm			
		3.7	4.0	4.7	5.4	3.7–5.5	8.5	7.5–9.5	12.5	11–13
16 mm	SO-14								•	
	SO-16								•	
	TQFP32								•	
	TQFP64								•	
	SSOP14								•	
	SSOP16								•	
	SSOP20								•	
	TSSOP8								•	
16 mm	TSSOP14								•	
	TSSOP16								•	
	TSSOP20								•	
	DPAK								•	
	PLCC20								•	
	LCC16								•	
	LCC 7x5								•	
	LCC 4x2.5									•
	POT4839-53									•
	Odd size tapes									•

*ALM8 magazine type only.

By doing the following observations, you can assure that an appropriate feeder is used:

- The entire component is exposed and can be picked in the pick position.
- One side of the cover tape stays attached to the component tape after the pick position.

Loading Removable Feeders

You can load an Agilis feeder with components using one of the following methods:

Method 1

1. Strip off the cover tape approximately 2–3 cm from the component tape. Make sure not to drop exposed components, see Figure 5-5.

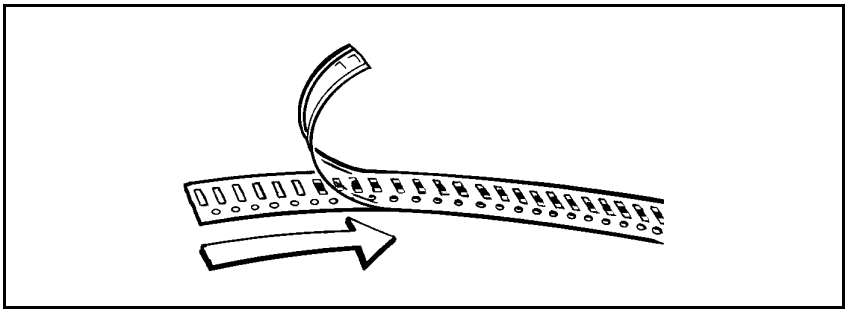

Figure 5-5. Stripping the cover tape.

2. Thread the component tape into the feeder. Press the cover tape in position with your finger. The carrier tape is supposed to run below, and the cover tape above, the feeder rail, see Figure 5-6.

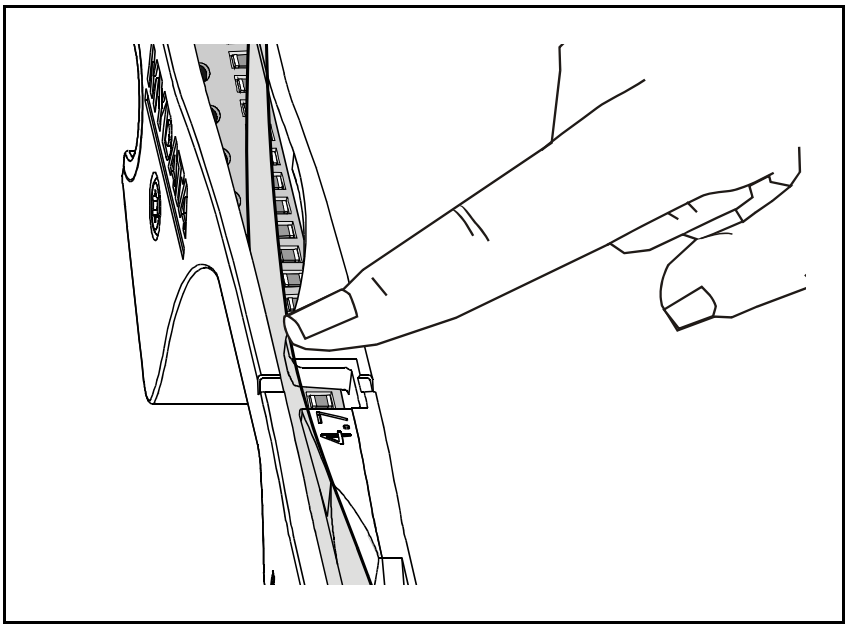

Figure 5-6. Pressing the cover tape into place.

Proceed with step 3.

Method 2

1. Cut the tape straight off with a pair of scissors. Then push the tape into the feeder. Make sure the carrier tape is running below, and the cover tape above, the feeder rail, see Figure 5-7.

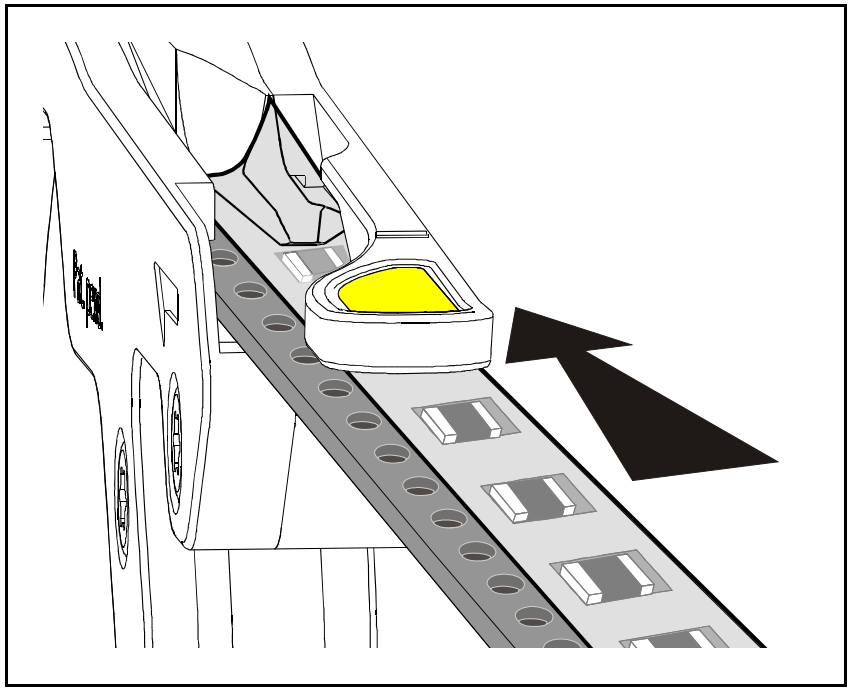

Figure 5-7. Threading tape onto feeder.

2. Keep pushing the component tape onto the feeder and the cover tape will open, see Figure 5-8.

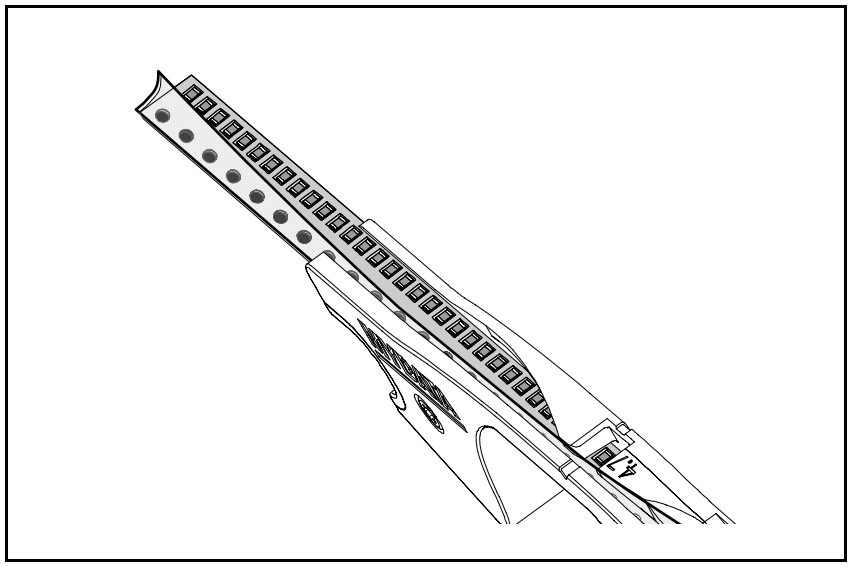

Figure 5-8. Pushing tape onto feeder.

Proceed with step 3.

3. Adjust the position so that the last empty pocket is placed between the two marks at the edge of the feeder.

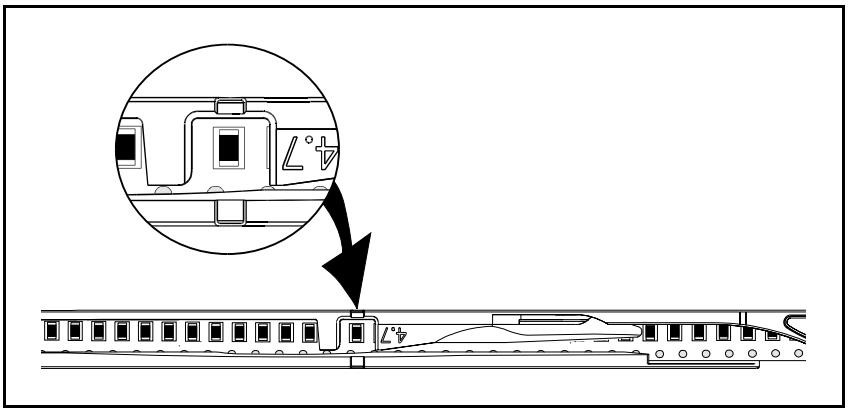

Figure 5-9. Component between marks at the edge of the feeder.

Inserting Tape in Adjustable Feeders

1. Adjust the feeder to its most narrow position. Insert tape as described above.

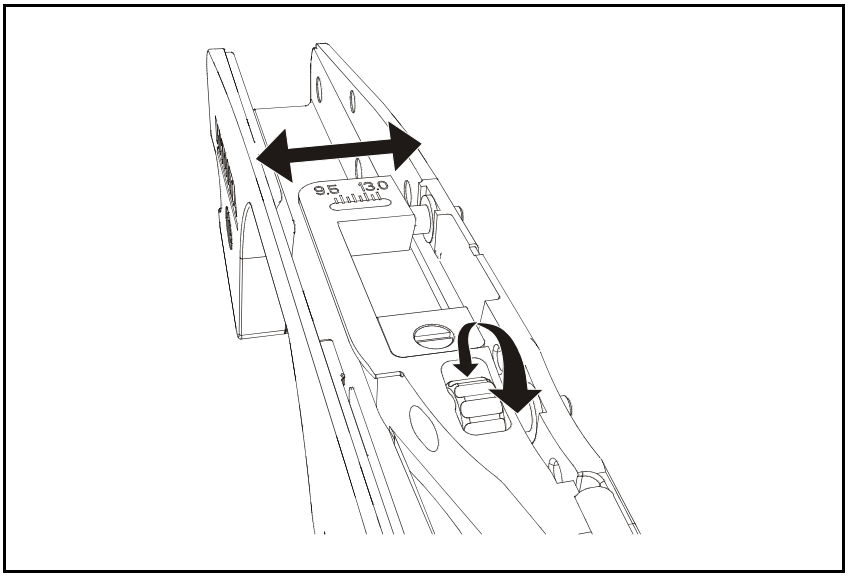

Figure 5-10. Adjustable feeder.

2. Use the adjustment wheel to move the feeder rail until the component is fully exposed. The scale shows the feeder width.
3. For 16 mm tape with 4 mm component pitch only:

   Move the component cover to its lower position to make sure that one component only is exposed in the pick position.

Unloading Removable Feeders

When you unload tape from an Agilis removable feeder, always do as follows:

1. Cut excess tape at the feeder front with a pair of scissors, see the figure.

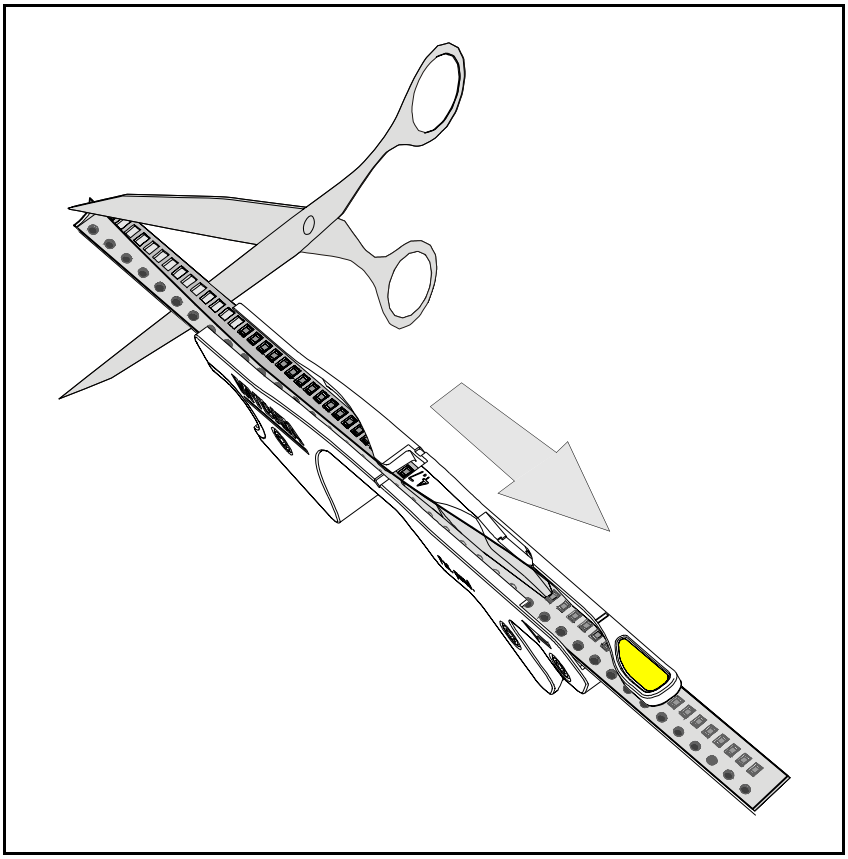

2. Pull the remaining tape backwards out of the feeder, see the figure.

CAUTION! Pulling the tape forwards out of the feeder may damage the feeder.

Tape Bins

Tape bins are used in Agilis magazines to hold tape reels. There are two sizes of bins available, one for 7 inch reels and one for 13 inch reels. The tape bin for 7 inch reels can hold up to 8 reels.

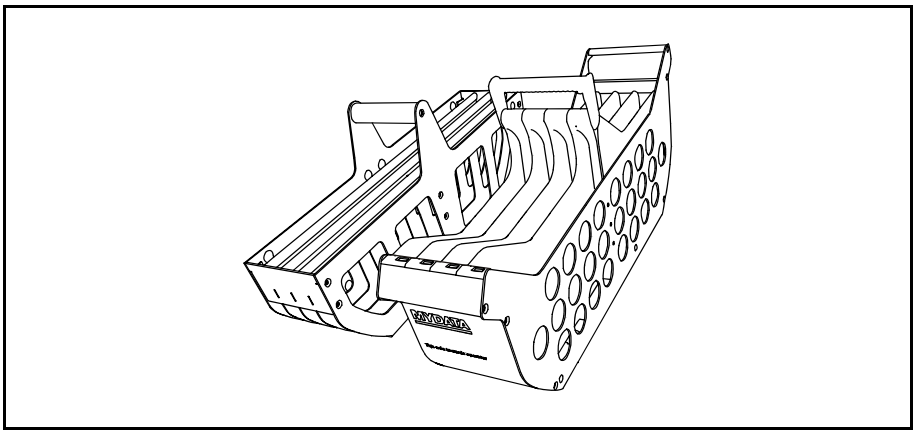

Figure 5-11. Tape bins for 7 inch reels.

A narrow type of 13 inch bins can hold up to 4 reels. A wide type of 13 inch bins can hold up to 8 reels.

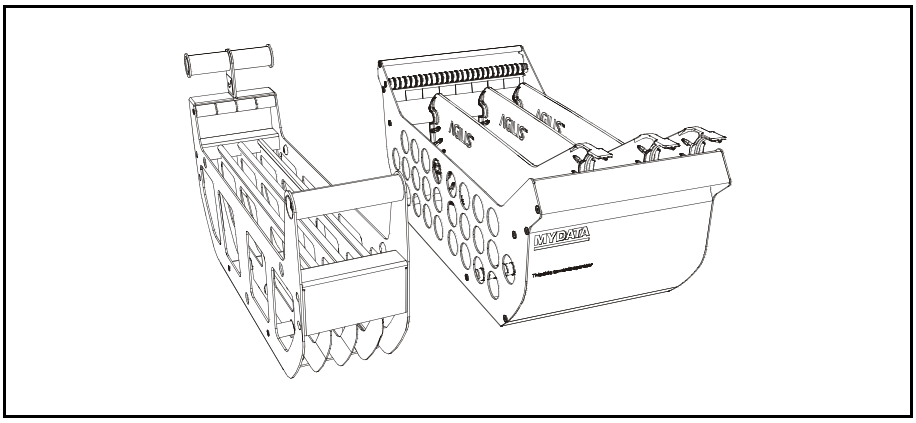

Figure 5-12. Tape bins for 13 inch reels.

On narrow 13 inch bins, the tape must run under the front handle.

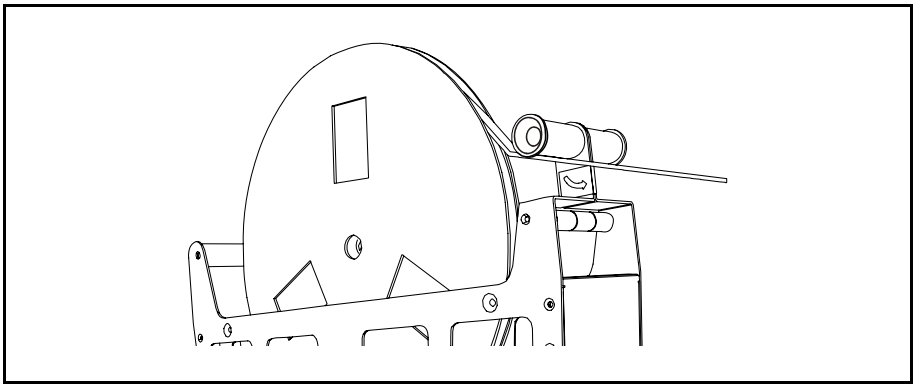

Figure 5-13. Tape under front handle on narrow 13 inch bin.

Wide 13 inch bins have the same width as the magazine and movable inner walls. Two or more reels can be placed between each wall.

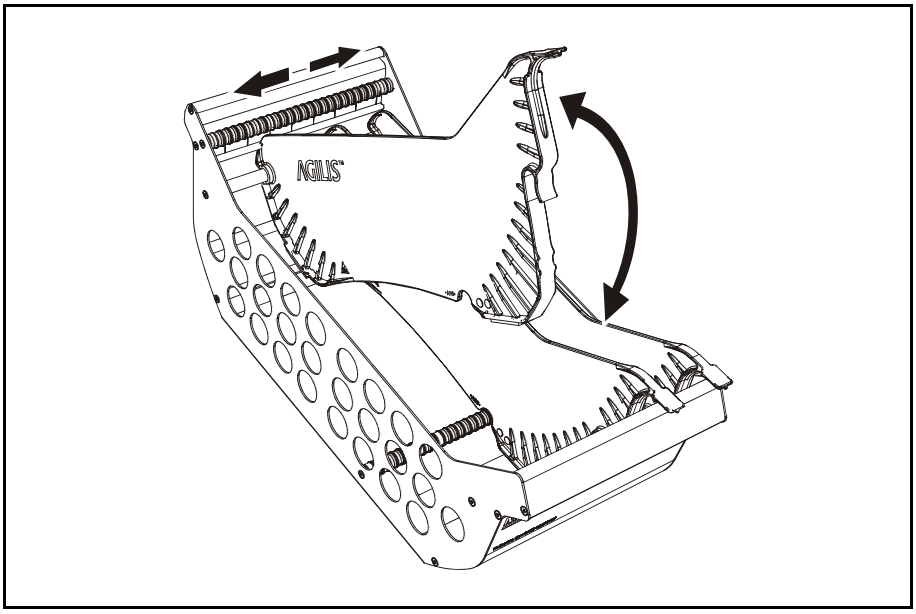

Figure 5-14. Movable inner walls on a wide 13 inch bin.

A later generation of bins has slots where feeders can be parked when not in use.

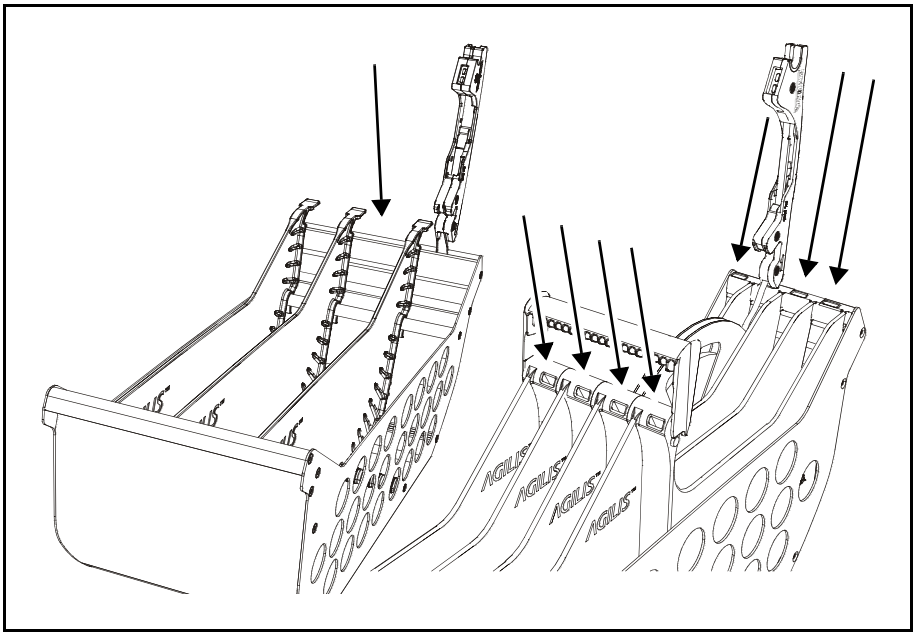

Figure 5-15. Parking removable feeders when not in use.

Loading a Magazine

1. Lift the safety clamp.

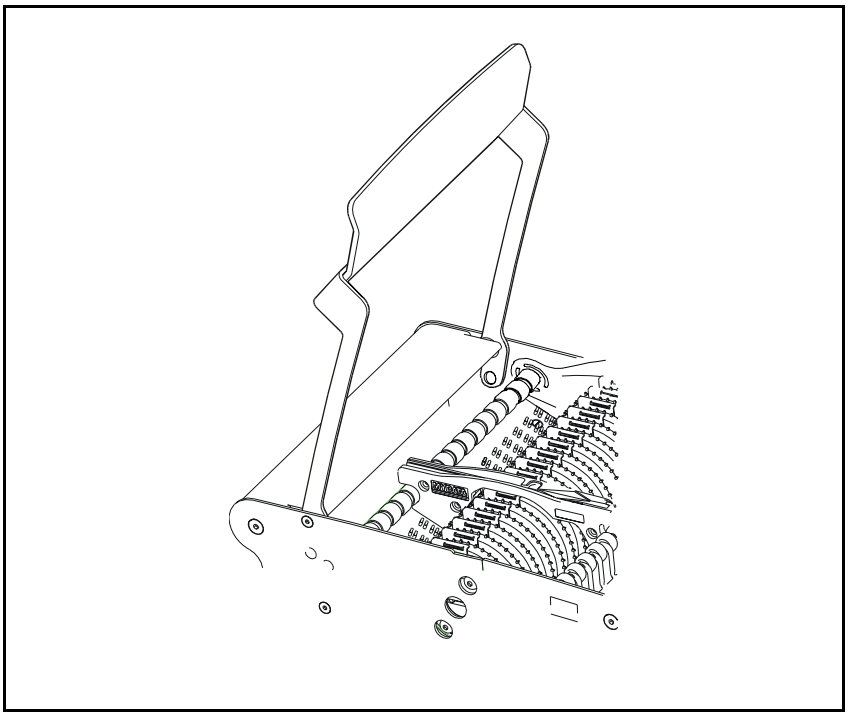

Figure 5-16. Lifting the safety clamp.

2. Put the component tape reel and feeder into a tape bin.

3. Place the bin into a magazine. There is a text on one side of the bin, which must be directed as shown in Figure 5-17.

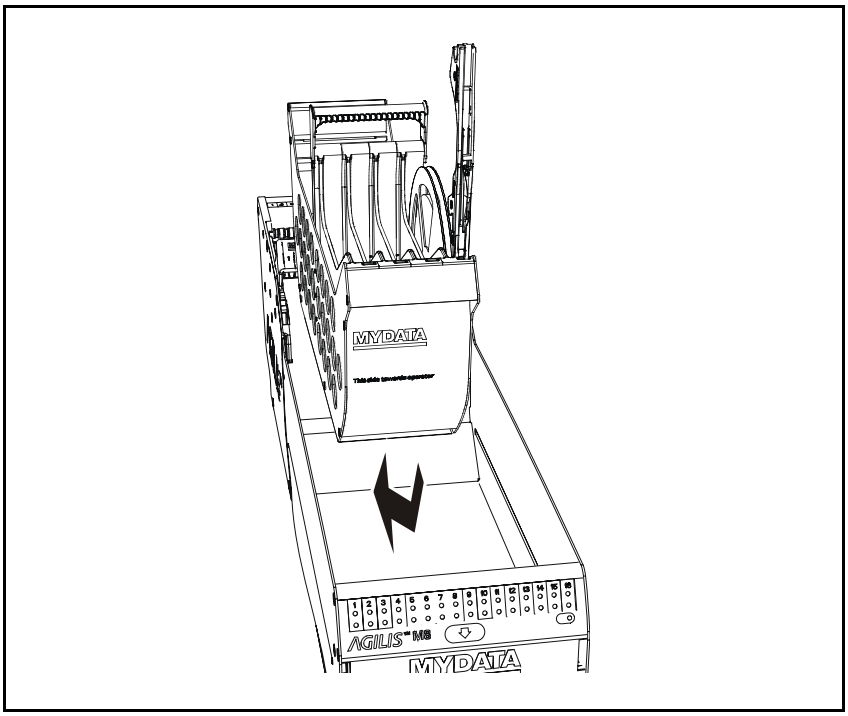

Figure 5-17. Placing the bin in a magazine.

4. Place a feeder in an empty feeder position.

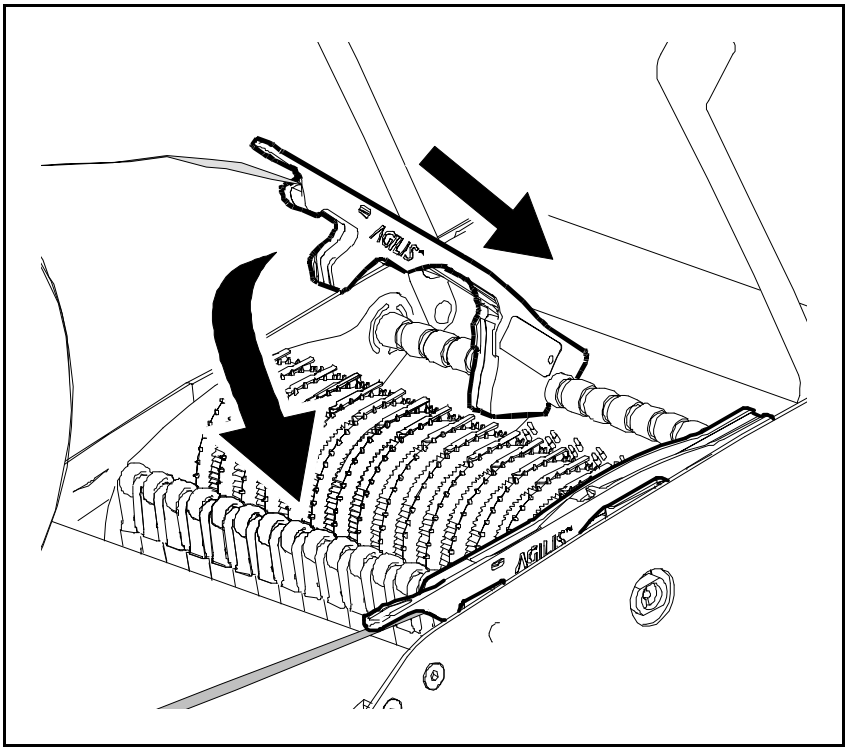

Figure 5-18. Inserting a feeder into the magazine.

5. Insert the feeder in the magazine (see Figure 5-18) in one of the following ways.

– ALM8 and ALM1216 magazines only:

  Push the feeder down until it locks in position.

– AM8 magazines only:

  Gently push the feeder down until the component tape touches the feeder wheel teeth.

  Engage the feeder wheel teeth in the component tape perforation by gently pulling the tape forwards and backwards.

  Push the feeder down until it locks in position.

6. Gently push the safety clamp down.

WARNING! The purpose of the safety clamp is to prevent you from putting your fingers between the feeder and the mount tool, which could cause serious injuries.

It is very important that all feeders are locked in position and the safety clamp is pushed all the way down. If not, the mount tool might hit the feeders and cause serious damage to the machine.

Inserting Magazine Into a Machine

To insert the magazine into the machine, do as follows:

1. Pull or fold out the waste shelf in front of the magazine.
   - For ALM8 and ALM1216 magazines, see Figure 5-19.
   - For AM8 magazines, see Figure 5-20.

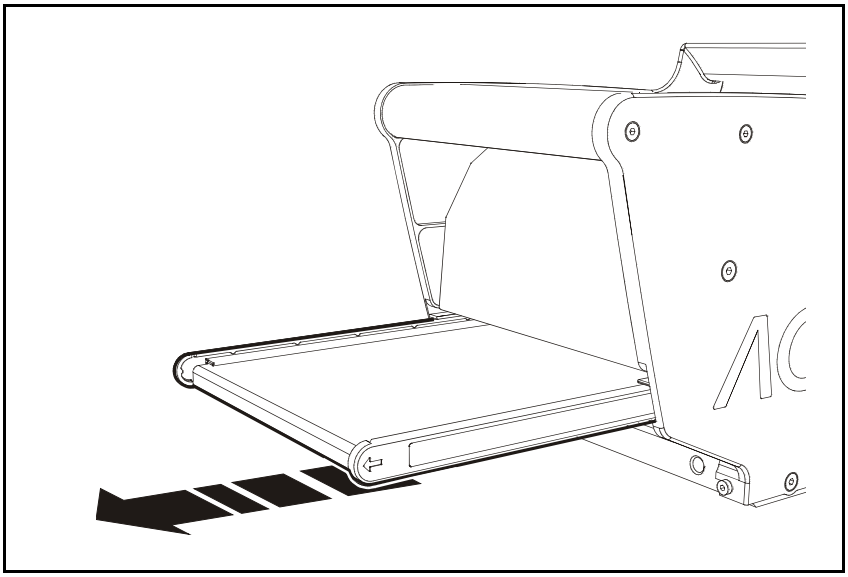

Figure 5-19. Pulling out an ALM8 or ALM1216 magazine waste shelf.

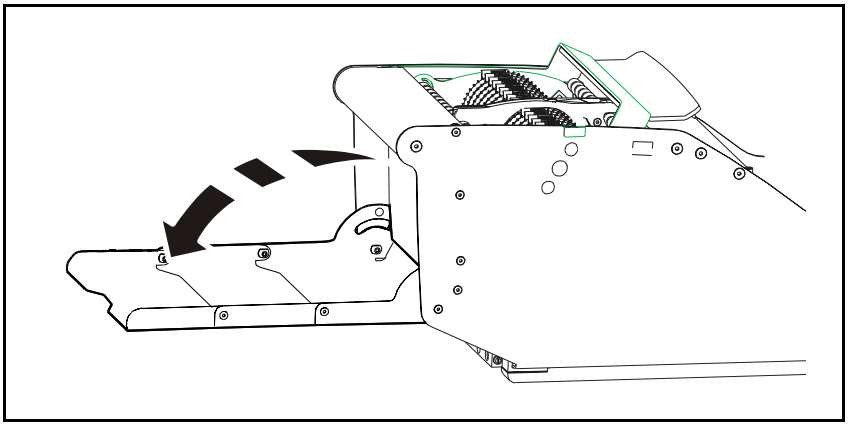

Figure 5-20. Folding out an AM8 magazine waste shelf.

2. Place the magazine in an empty magazine position and push it gently forward as far as it goes.
3. Make sure the green LED in the bottom right corner of the magazine front panel and green LEDs for loaded feeder positions are on.

Large Reel Attachment

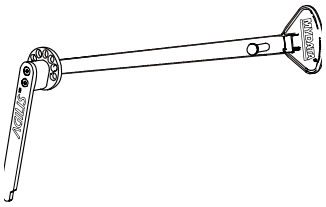

A Large Reel Attachment, LRA, is available as a complement to the tape bins. It can handle big and very heavy reels.

The LRA can be attached in four different positions on the magazine and the arm can be adjusted to a suitable angle.

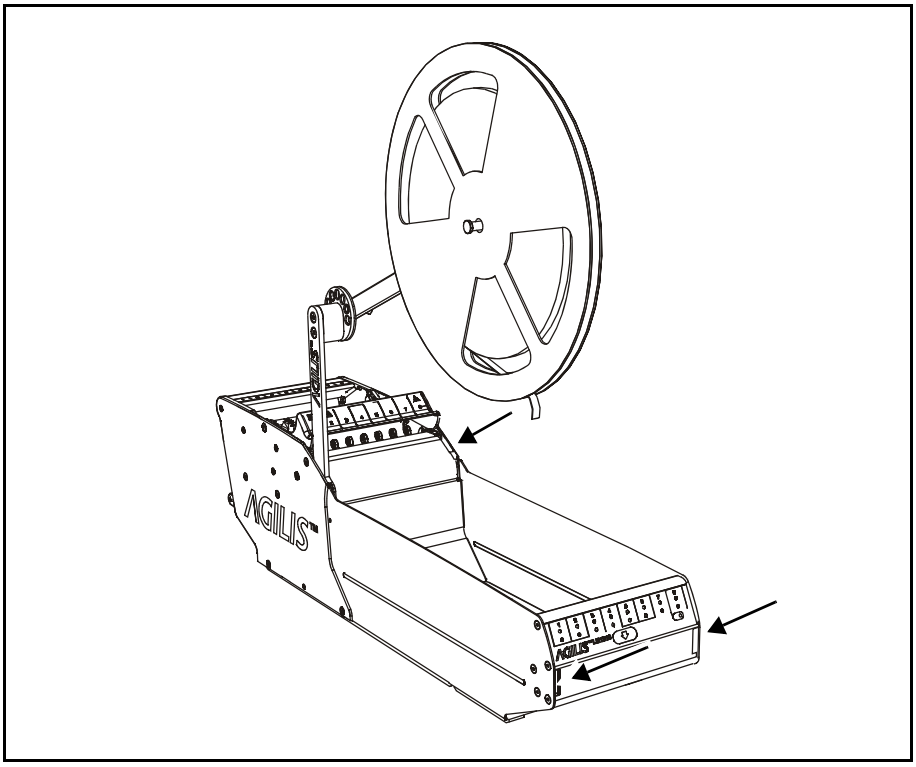

Figure 5-21. LRA attachment points.

To set the desired angle of the arm, pull out the black knob.

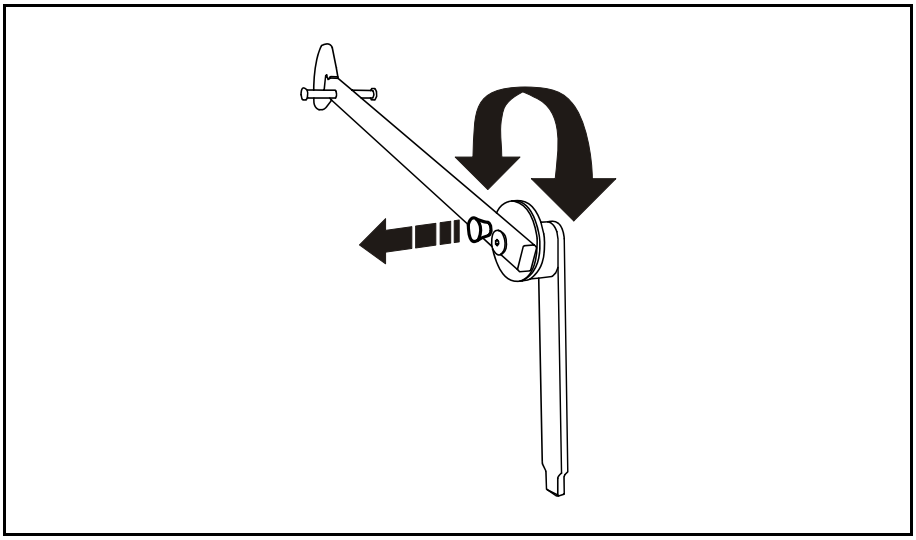

Figure 5-22. Setting the Large Reel Attachment angle.

Removing a Magazine From a Machine

To remove an Agilis magazine from a machine, do as follows:

The magazine panel is further described in the next section.

1. Press the release button on the magazine panel, see Figure 5-23. The machine will stop picking components from the magazine.

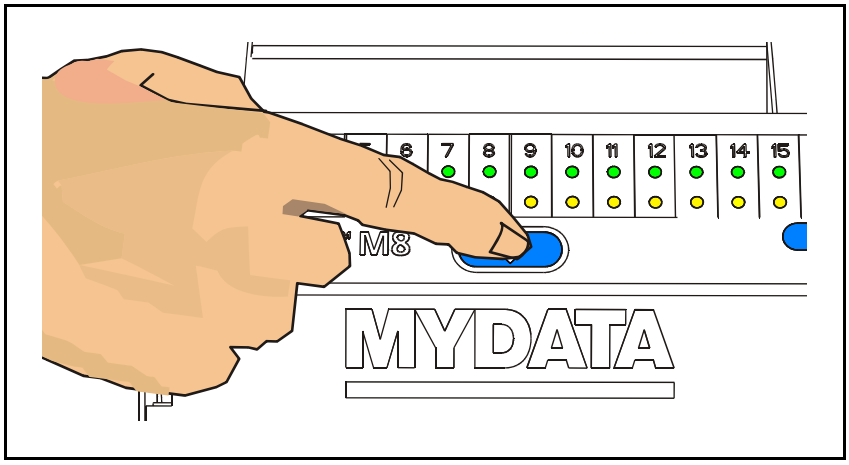

Figure 5-23. Pressing the release button.

2. Wait until the green magazine status LED in the bottom right corner of the front panel is off, see Figure 5-24.

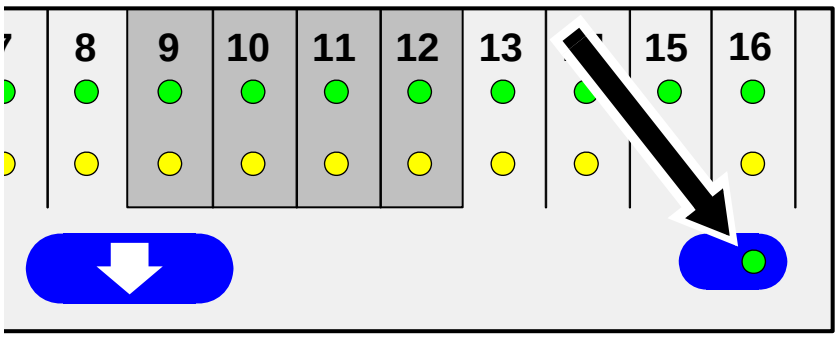

Figure 5-24. Agilis magazine status LED.

3. Pull the magazine out from the machine.

Magazine Panel

Agilis magazines have a panel that is visible during operation. This panel contains status LEDs and a button. The panel is shown in Figure 5-25 and is further described below the figure.

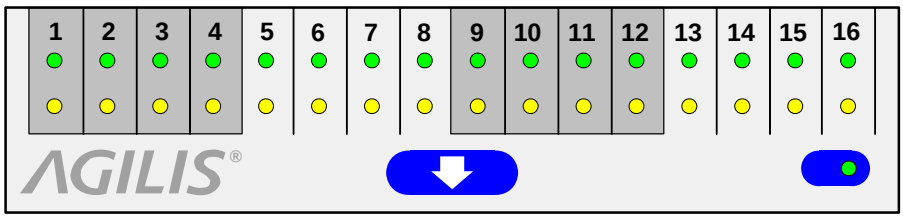

Figure 5-25. Agilis magazine panel.

The upper part of the panel contains two horizontal lines of feeder status LEDs, one upper line with green LEDs and one lower line with yellow LEDs. These are grouped to be one green and one yellow LED for each feeder position.

The lower part of the panel contains a release button in the middle and a magazine status LED to the right.

The functionality, which is identical to other MYDATA magazines, is described below.

Feeder status LEDs

A green and yellow LED pair for each feeder position indicates the current status as described in the table.

LEDs		Feeder status
Green	**Yellow**	
Off	Off	Feeder not used in loaded layout.
Off	Blinking	Pick error.
Blinking	Off	Feeder used in loaded layout. Short supply of components.
On	Off	Feeder used in loaded layout. Large supply of components.

Release button

Pressing the release button, marked with a down arrow on the panel, results in the following two actions:

- The machine stops picking from the magazine.
- Existing errors for the magazine are reset (the same reset action as an insertion or a removal of a magazine).

Magazine status LED

The green magazine status LED, to the right on the panel, indicates the current status as shown in the table.

Green LED	Magazine status
Off	The machine has stopped picking from the magazine. The magazine is ready to be pulled out.
Blinking	The release button has been pressed. The machine is about to stop picking from the magazine.
On	The magazine is inserted in the machine and accessible to TPSys.

To consider at operation

Always make sure the green magazine status LED and the green feeder status LEDs for used feeders are on after inserting the magazine in a machine.

CAUTION! Always wait until the green magazine status LED is off before pulling a magazine out. Otherwise, the mount head can be damaged.

TM Magazines

TM magazines are tape magazines with fixed feeders. There are various types for various tape sizes.

Loading TM Magazine

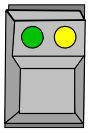

Before removing a TM tape magazine from a machine, make sure the green LED is off (see the figure). When the green LED is off, pull the magazine out from the machine.

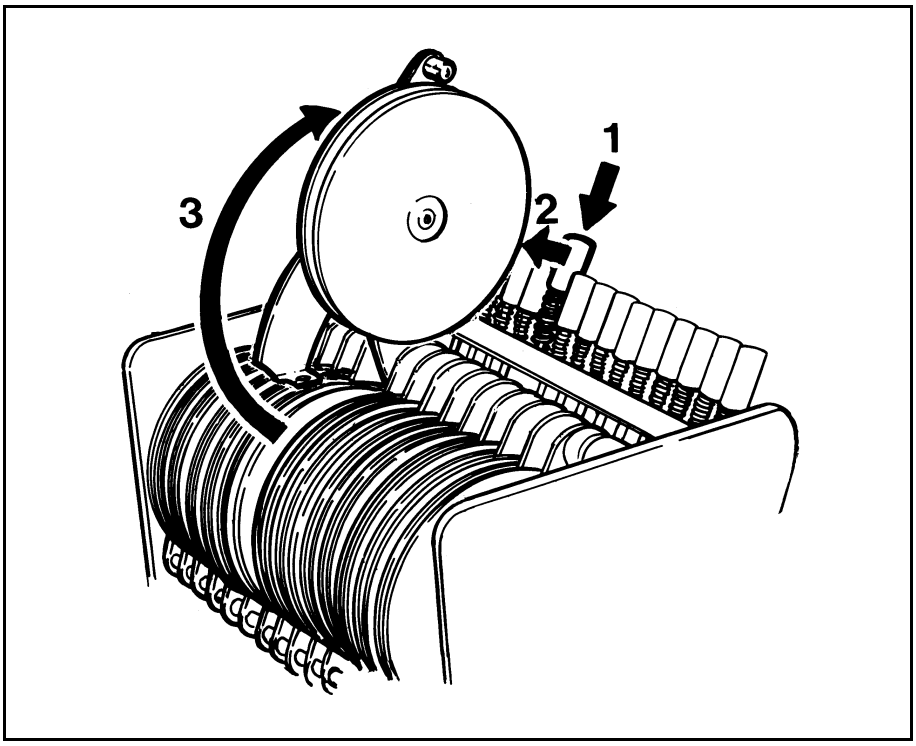

Figure 5-26. Loading a TM magazine.

Load the magazine as follows:

1. Press the lock button down for the feeder to be loaded ('1' in Figure 5-26).
2. Pull the button forward while holding it down (2). When the button is released the locking mechanism is disengaged and the button comes up.
3. Lift up the cover tape take up reel (3). If this is not empty remove it from the magazine by pulling it off the hub and empty it.

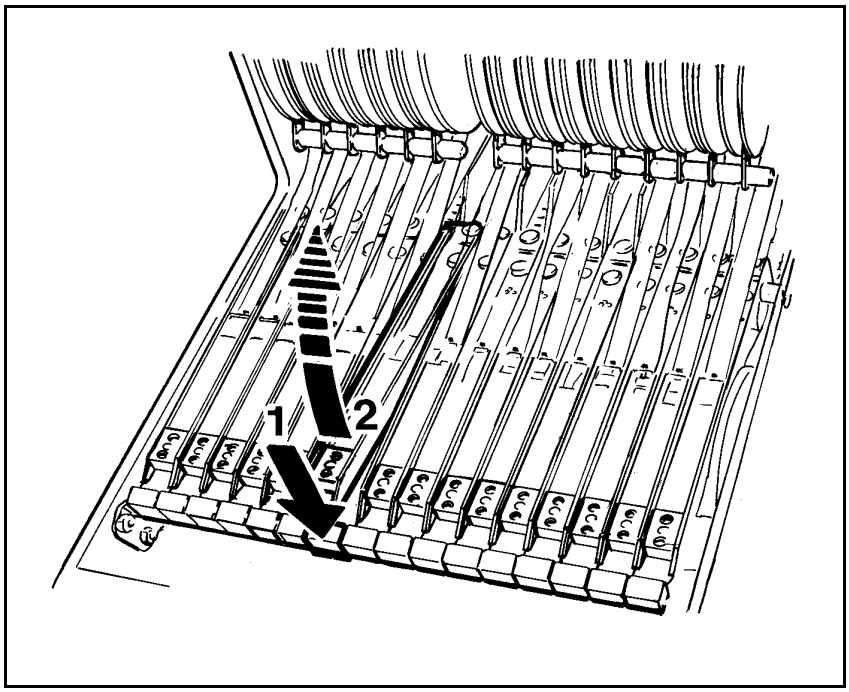

Figure 5-27. Lifting up the pick-up rail.

4. Press the pick-up rail toggle ('1' in Figure 5-27).

5. Lift up the pick-up rail (2).

6. Strip off the cover tape 10 cm approximately on the component tape without dropping the uncovered components into the magazine.

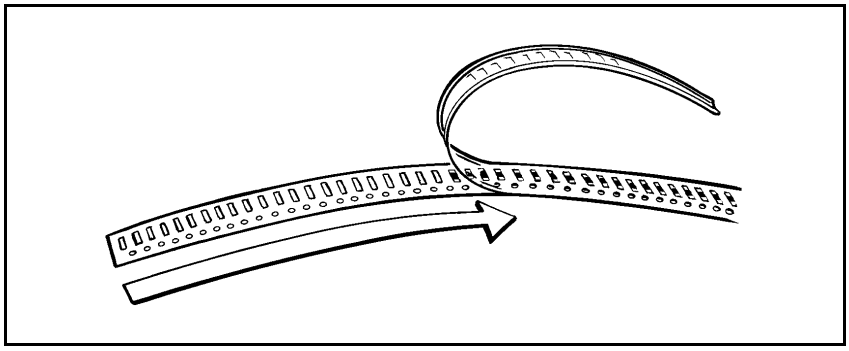

Figure 5-28. Stripping the cover tape.

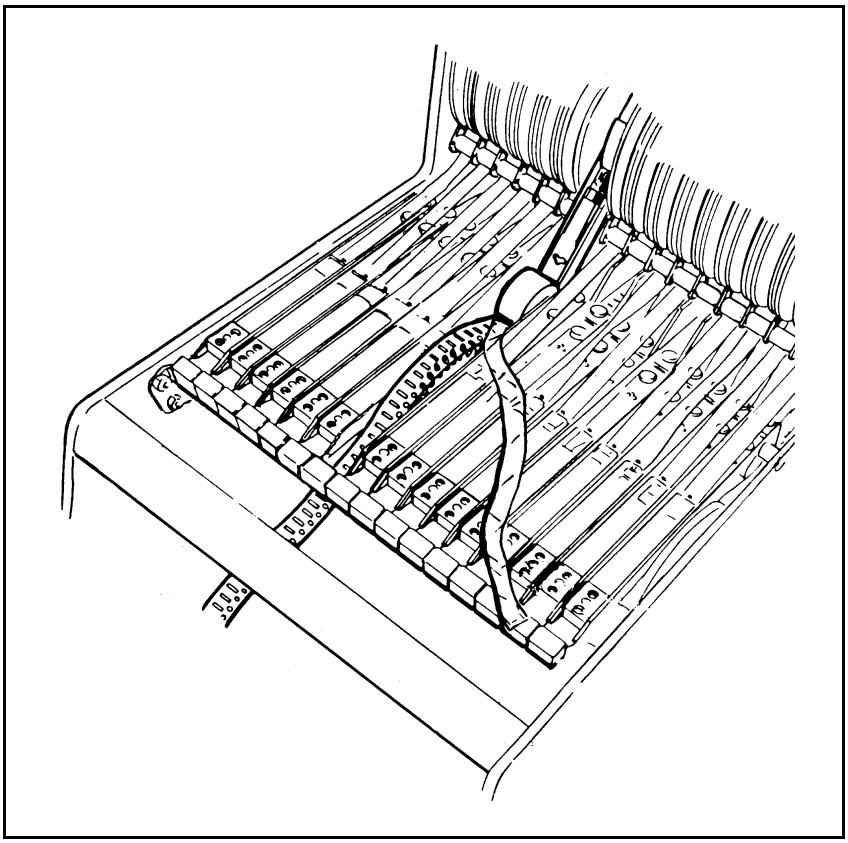

Figure 5-29. Positioning the tape in the feeder.

7. Load the component reel into the magazine and pull the tape (together with the cover tape) to the feeder rail (see Figure 5-29).

Pull the tape down so that the feeder wheel teeth engage the tape perforation.

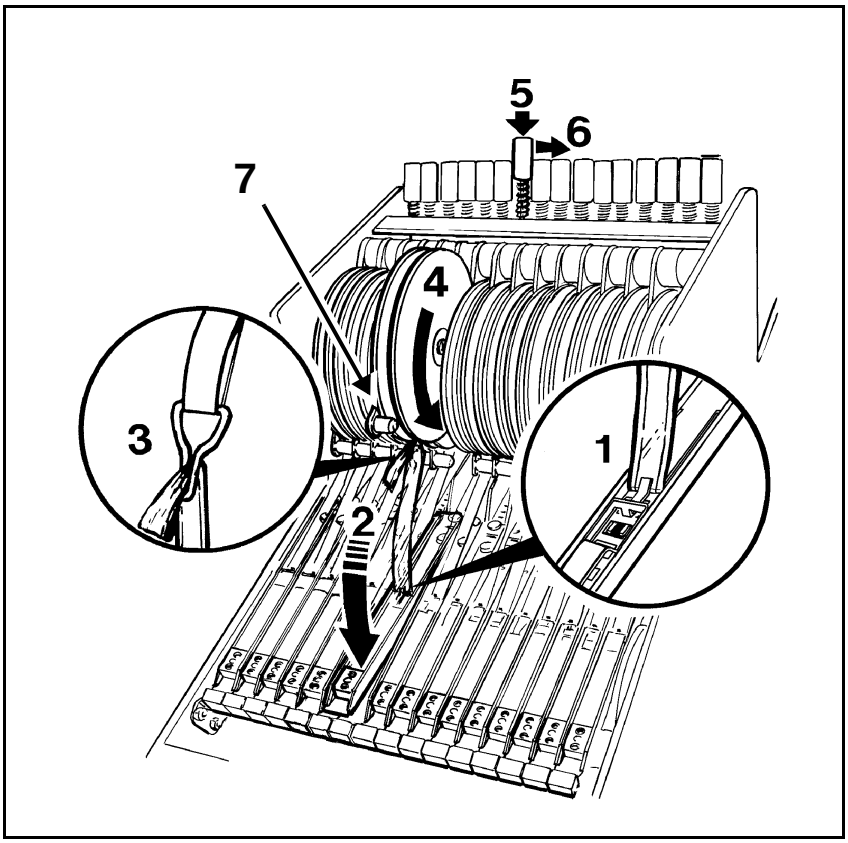

Figure 5-30. Excess of cover tape onto the reel.

8. Thread the cover tape through the opening and under the spring of the feeder rail ('1' in Figure 5-30).

9. Push down the feeder rail until locked (2).

10. Fix the cover tape to the clip (3).

11. Roll up excess cover tape and pull the take up reel down (4). Ensure that the cover tape is pulled under the brass dowel (7). Otherwise, the cover tape may tear off, or the tape may feed forwards every time the take up reel is turned.

12. Press the lock button (5).

13. Pull the button back into its locking position (6). When the button is released it will stay down.

Calibration of the component pick position is described on page 5-38.

Release Button and Status LEDs

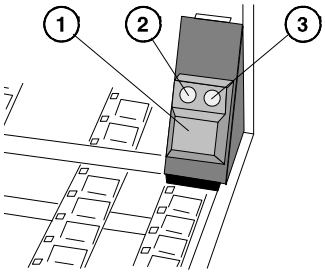

All TM magazines must have a release button ('1' in the figure) with a green status LED (2) and a yellow status LED (3).

Release button (1)

Pressing the release button results in the following two actions:

- The machine stops picking from the magazine.
- Existing errors for the magazine are reset (the same reset action as an insertion or a removal of a magazine).

Green status LED (2)

The green status LED indicates the current status as shown in the table.

Green LED	Magazine status
Off	The machine has stopped picking from the magazine. The magazine is ready to be pulled out.
Blinking	The release button has been pressed. The machine is about to stop picking from the magazine.
On	The magazine is inserted in the machine and accessible to TPSys.

Yellow status LED (3)

The yellow status LED indicates the current status as shown in the table.

Yellow LED	TEX status
Off	Normal operation.
On	At least one feeder is empty or a pick error has occurred.

To consider at operation

Always make sure the green magazine status LED is on after inserting the magazine in a machine.

CAUTION! Always wait until the green magazine status LED is off before pulling a magazine out. Otherwise, the mount head can be damaged.

TM Flex Magazines

A TM Flex magazine is a flexible tape magazine that allows mixing feeder units for 8, 12, 16, 24, 32, 44, 56 and 72 mm tape widths in the same magazine. The maximum number of feeder units that can be fitted depends on the module size of each feeder unit. There is room for up to 16 feeders in each magazine.

Single, dual, and quad feeder mechanisms are available. There is also an adjustable feeder that can take tape with up to 136 mm width.

TM Flex magazines are loaded in the same way as TM magazines.

TM Flex magazines are equipped with release buttons and status LEDs like TM magazines, see page 5-24.

This section describes only how to mount TM Flex feeder mechanisms in magazines because all other handling is the same as for TM magazines.

Mounting Feeder Mechanism

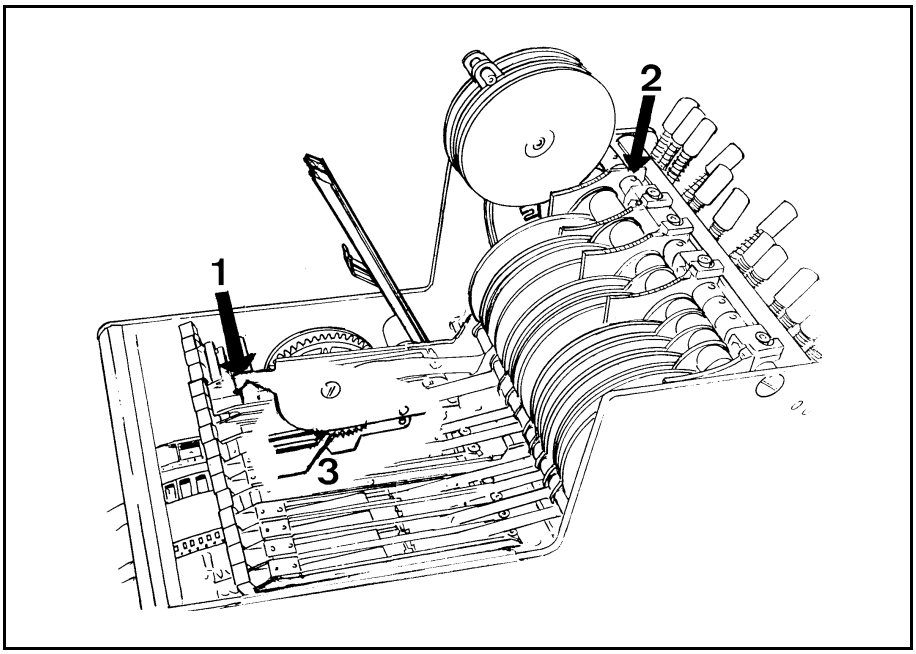

Figure 5-31. Inserting the feeder mechanism.

1. Hold the cover tape take up reel and the pick-up rail and position the feeder in the magazine. First, position the lower bracket to the axle groove ('1' in Figure 5-31) and then the upper bracket (2).

If you mount a multi-feeder, make sure that the separation sheet (or sheets if more than two feeders) enters between the feed bushings (3).

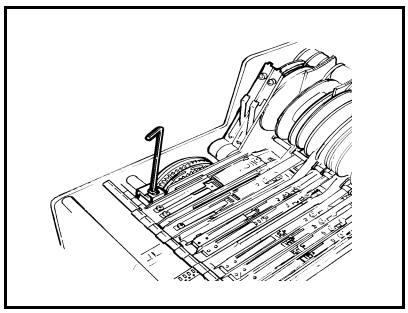

Figure 5-32. Lower bracket.

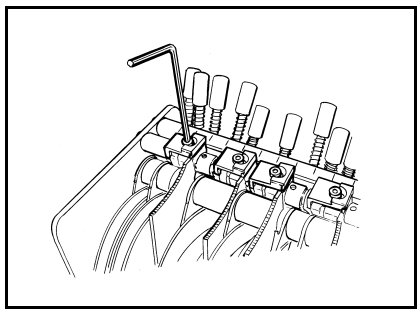

Figure 5-33. Upper bracket.

2. Fasten the lower bracket (Figure 5-32) and then the upper bracket (Figure 5-33). Some feeder types may lack the lower bracket, for instance the 56 mm type. In these cases you only fasten the upper bracket.

Do not fasten the brackets in the reverse order.

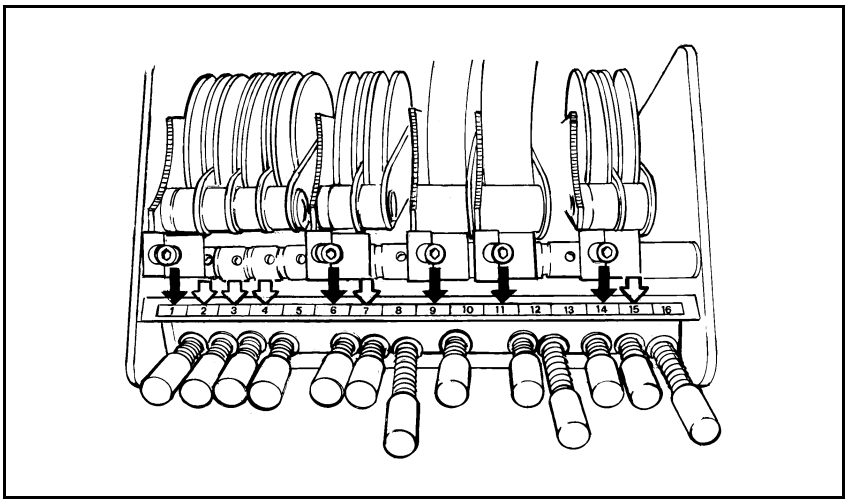

Figure 5-34. First feeder number at the screw.

3. Feeder numbers are read at the center of the upper screws, see the arrows in Figure 5-34. This applies also to the first feeder number of a multi-feeder mechanism.

   Feeder numbers are used when updating magazine data in TPSys.

Adjustable Flex Feeder

Adjustable flex feeders are used in TMD Flex magazines. These are available for tape widths from 32 mm up to 136 mm.

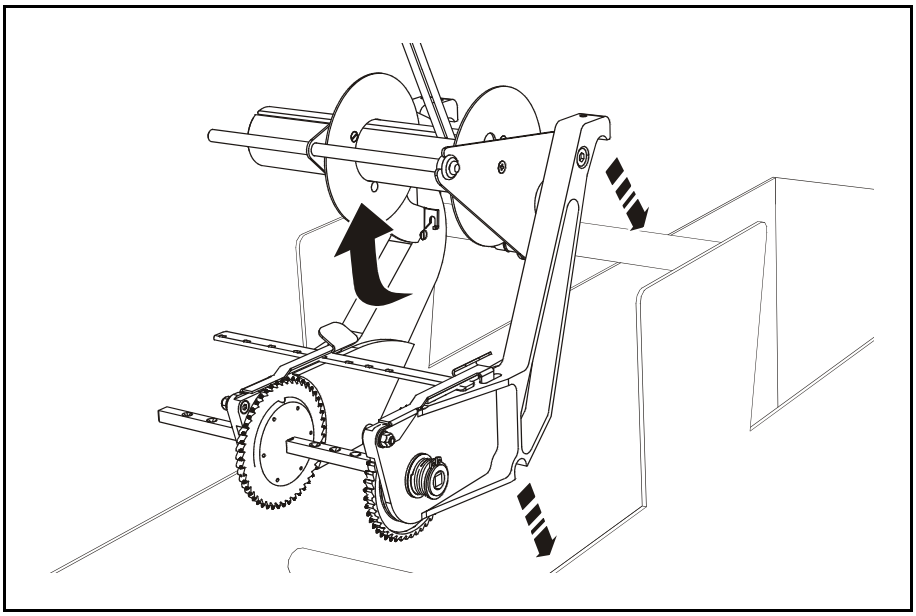

Figure 5-35. Adjustable flex feeder.

1. Raise the cover tape arm when inserting this type of feeder, see Figure 5-35.
2. Adjust the width by sliding the free side on the shafts.
3. Fasten the feeder with two M3 screws on the top.

Updating TPSys

When magazine feeders have been loaded, their feeder contents must be updated in TPSys. This is done by accomplishing the steps listed below.

- Agilis magazines only: Connect Agilis feeders to component types, see page 5-29.
- TM magazines only: Select magazine and enter the component types loaded in the feeders, see page 5-32.
- Update the feeder quantities, see page 5-34.
- Locate and adjust the magazines as detailed on page 5-36.

Connecting an Agilis Feeder to a Component Type

There are five different ways to inform TPSys which type of component is loaded in a specific Agilis feeder:

- Using a TPSys barcode scanner, see below.
- Editing the *Removable Feeders* window.

  In the *Removable Feeders* window you can enter the component type that is loaded into a selected Agilis feeder. The *Removable Feeders* window is described on page 5-30.

  You can also register a new Agilis feeder in the same window.
- Editing the *Removable Feeder Contents - Magazine [***]* window, accessible via the *Magazines* window.

  The desired feeder is selected in their *Magazines* window, described on page 5-32. The loaded component type can then be entered in a feeder contents window, described after the *Magazines* window.
- Updating the *Magazine kit* window.

  This window contains information about needed magazine contents for various layouts. At assembling, load magazines as detailed in the kit list and apply the magazine kit. See Chapter 11 for more information about magazine kits.
- Using a MYLabel barcode scanner.

  MYLabel is a separate program that keeps track of component carriers (tapes, sticks, and trays) used in the production. A barcode scanner is included in the MYLabel system.

  See the *MYLabel, User's Manual* for more information about this system.

If MYLabel is used, then magazine load updates must be done by using the MYLabel barcode scanner.

Using a TPSys barcode scanner

An Agilis feeder is connected to a component type by using an optional TPSys barcode scanner as follows:

1. Make sure the barcode function is activated, see Chapter 11.
2. Scan the barcode on the component reel.
3. Scan the barcode on the Agilis feeder.

When you hear a beep sound the connection is completed.

Barcode scanning can be done on stand-alone data servers while other operations are running. At least one of the machines in a network has to be equipped with the optional barcode feature.

Removable Feeders Window

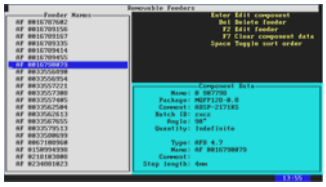

To open the *Removable Feeders* window, select *Magazine* > *Removable Feeders* in the main menu.

The *Removable Feeders* window layout is shown in the miniature figure to the left. All included entries are described below.

Command keys

Del – Delete feeder

A feeder can be deleted, provided the feeder is not inserted in a magazine that is inserted in a machine.

F2 – Edit feeder

By pressing <F2> the component data for the removable feeder can be edited.

F7 – Clear component data

Key <F7> clears the contents of the selected feeder.

Feeder Names

This list shows all removable feeders in the machine system or in the machine network if shared databases are used. The magazines they are inserted in are shown in brackets, if inserted in a machine. No position numbers are shown for feeders registered but not inserted.

The default sort order is alphabetical, sorted by feeder names.

By pressing <Space> the sort order is changed to show all feeders inserted in magazines or machines uppermost, still sorted by name. Removable feeders not inserted in magazines or machines are shown downmost.

A new removable feeder is registered in TPSys after being scanned once with a barcode scanner, or once being inserted in a machine.

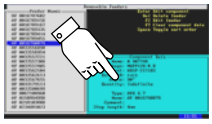

Component Data

This box contains data for the feeder selected in the *Feeder Names* list. Press <F2> to edit data.

Name

The name of the component in the feeder.

You can change a component by selecting from the *Components* window. Just enter the first characters of the component name and press <Enter>, or simply press <Enter>.

Package

The component package type, set in the *Components* window.

Comment

User comment text, set in the *Components* window.

Batch ID

This field is intended for component batch number found on, for instance, the tape reel, plastic stick, storage box, or delivery note.

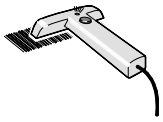

The batch number can be either typed into this field or read using a TPSys barcode scanner.

The TPSys optional barcode scanner is described in Chapter 11.

Angle

The component angle in the feeder. Can be 0°, 90°, 180°, or 270°/–90°.

Quantity

The component quantity in the feeder.

The quantity is to be updated when loading the removable feeder. The value is then counted down each time a component is taken. The remaining number of components is indicated in this field.

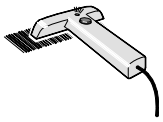

The quantity can be either typed into this field or read using a TPSys barcode scanner.

The TPSys barcode scanner is described in Chapter 11.

Type

The removable feeder type.

Name

The removable feeder name. The default name is the serial number, but this can be changed.

Comment

User comment for the removable feeder.

Step length

Tape advancement length in mm per component feed.

Magazines Window

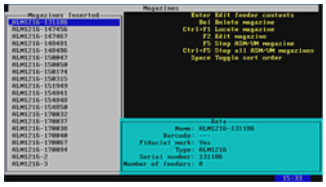

To open the *Magazines* window, select *Magazine* > *Magazines* in the main menu.

The *Magazines* window layout is shown in the miniature figure to the left. All included entries are described below.

Command keys

Del – Delete magazine

A magazine can be deleted provided the magazine is not inserted in the machine. All magazine information is erased if the magazine is deleted.

Ctrl+F1 – Locate magazine

By pressing <Ctrl> + <F1>, the X position of the selected magazine is located using automatic fiducial mark search. If the automatic fiducial mark search fails, you can center the fiducial mark manually by using the trackball. See also the *Locate All Magazines* section under *Magazine* in *Appendix A – Menu Reference Guide*.

The Y position is adjusted mechanically, see the *MY100, Service Manual*.

F2 – Edit magazine

The selected magazine can be renamed and the barcode can be changed by pressing <F2> and typing a new name or reading a new barcode (see below).

F5 – Step ASM/VM magazine

Performs feeding steps in a selected stick magazine. Not applicable to tape magazines.

Ctrl+F5 – Step all ASM/VM magazines

Performs feeding steps in all inserted stick magazines. Not applicable to tape magazines.

Names

This list shows the magazines in the machine and in the machine network, if shared databases are used.

Default sort order is alphabetical. By pressing <Space> once, the sort order is changed to show all magazines inserted in the machine, sorted by magazine positions. After these magazines, magazines inserted in other machines are shown, sorted by machine and magazine positions. By pressing <Space> again, the sort order is changed to show those magazines which contain components included in the loaded layout.

Magazine position numbers are shown in brackets, if inserted in the machine. No position number is shown for magazines registered but not inserted.

( ) If shared databases are used, then the machine number is also shown in brackets for magazines inserted in other machines, for instance (my100-14n0491/8) if the magazine is inserted in magazine position 8 in a MY100 machine with the serial number 491.

* An asterisk (*) indicates that the magazine contains components included in the currently loaded layout.

Data

This box contains data for the magazine selected in the *Names* list.

Name

User name of the magazine.

If no user name is assigned, this field shows the magazine type followed by the serial number, for instance ALM8-1234.

The magazine name can be changed by pressing <F2>.

Barcode

Agilis tape magazines only:

A barcode can be used to inform TPSys which type of component is loaded in a specific Agilis feeder. All Agilis feeders have unique barcodes. You use this feature by scanning the barcode on the component reel and then the barcode on the Agilis feeder.

TM tape magazines only:

A barcode can be used to inform TPSys which type of component is loaded in a specific feeder in a specific TM magazine. All TM magazines have unique barcodes. Further information about barcode reading is found in Chapter 11.

Barcodes can be changed by pressing <F2> and using the barcode scanner.

Fiducial mark

Indicates if automatic magazine fiducial mark search is active or not.

Type

The magazine type. This is read from the magazine, which means that it cannot be changed in this box.

Serial number

The magazine serial number. This is read from the magazine, which means that it cannot be changed in this box.

Number of feeders

The number of feeders in the magazine. This is read from the magazine, which means that it cannot be changed in this box.

Feeder Contents Window

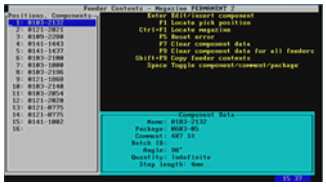

To open the feeder contents window, select magazine and press <Enter> in the *Magazines* window (page 5-32).

This window is entitled *Removable Feeder Contents - Magazine [***]* for an Agilis magazine, or *Feeder Contents - Magazine [***]* for a TM magazine. The [***] string is a substitute for the magazine name.

The feeder contents window layout is shown in the miniature figure to the left. All included entries are described below.

For removable feeders only.

This comment means that the entry is included in windows for Agilis magazines only.

Command keys

F1 – Locate pick position

The feeder pick position can be located by pressing <F1>. The procedure is described on page 5-38.

Ctrl+F1 – Locate magazine

By pressing <Ctrl> + <F1>, the X position of the selected magazine is located using automatic fiducial mark search. If the automatic fiducial mark search fails, you can center the fiducial mark manually by using the trackball. See also the *Locate All Magazines* section under *Magazine* in *Appendix A – Menu Reference Guide*.

The Y position is adjusted mechanically, see the *MY100, Service Manual*.

For removable feeders only.

F2 – Edit feeder

By pressing <F2> the component data for the removable feeder can be edited.

F5 – Reset error

Key <F5> resets a feeder error. This is used if an error is caused by a programming error that does not require physical feeder manipulation.

F7 – Clear component data

Key <F7> clears the contents of the selected feeder.

For removable feeders only.

F8 – Remove all feeders

Key <F8> removes all feeders from a magazine provided the magazine is not inserted in the machine.

F9 – Clear component data for all feeders

A magazine can be cleared from all components by pressing <F9> and confirming the deletion.

Shift+F9 – Copy feeder contents

The magazine feeder contents can be copied from another magazine by pressing <Shift> + <F9> and typing the magazine name to copy from (or pressing <Tab> or <Enter> and selecting magazine from a magazine list).

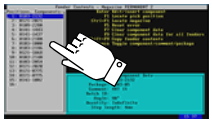

Positions, Components / Positions, Comments / Positions, Packages

This box shows the components loaded in the magazine feeders.

The default display mode is *Positions, Components*. By pressing <Space> the display mode is changed to *Positions, Comments*. By pressing <Space> again the display mode is changed to *Positions, Packages*.

* An asterisk (*) indicates that the magazine contains components included in the currently loaded layout.

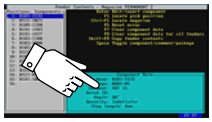

Component Data

Name

The name of the component in the feeder.

You can change a component by selecting from the *Components* window. Just enter the first characters of the component name and press <Enter>, or simply press <Enter>.

Package

The component package type, set in the *Components* window.

Comment

User comment text, set in the *Components* window.

Batch ID

This field is intended for component batch number found on, for instance, the tape reel, storage box, or delivery note.

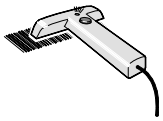

The batch number can be either typed into this field or read using a TPSys barcode scanner.

The TPSys optional barcode scanner is described in Chapter 11.

Angle

The component angle in the feeder. Can be 0°, 90°, 180°, or 270°/–90°.

Quantity

The component quantity in the feeder.

The quantity is to be updated when loading the removable feeder. The value is then counted down each time a component is taken. The remaining number of components is indicated in this field.

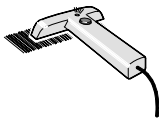

The quantity can be either typed into this field or read using a TPSys barcode scanner.

The TPSys barcode scanner is described in Chapter 11.

For removable feeders only. *Type*

The removable feeder type.

For removable feeders only. *Name*

The removable feeder name. The default name is the serial number, but this can be changed.

For removable feeders only. *Comment*

User comment for the removable feeder.

Step length

The tape advancement step length, defined in mm.

Magazine Locations and Adjustments

Before the magazines can be used, they have to be located and adjusted as to their positions, pick line, and pick positions.

This is done by accomplishing the steps listed below.

- *Automatic Magazine Location*, page 5-37.
- *Manual Location of Pick Positions*, page 5-38.
- *Adjusting a Phase Displacement – Agilis M8*, page 5-41.

  This action has only to be performed if a phase displacement occurs.
- *Pick Line Adjustment – Agilis M8*, page 5-42.

Automatic Magazine Location

If a machine picks from a magazine that has not been properly located, it will result in pick errors. All magazines are, of that reason, automatically located by TPSys before picking.

Every time a magazine is inserted, it is treated as not located. If TPSys fails to locate a magazine automatically, the magazine is disabled. A message and an operator alert is also generated. The assembling continues using other magazines.

Such a magazine has to be manually located before it is in operation again.

A selected magazine can be located by giving a command in the *Magazines* window, see page 5-32.

All magazines can be located by selecting *Magazine* > *Locate All Magazines* in the main menu.

Manual Location of Pick Positions

This section describes how to locate pick positions in tape magazines.

1. Select *Magazine > Locate Feeder Positions*.
2. Select magazine in the list.
3. Select a feeder to locate, or select all feeders.

   If the magazine is not located, the system suggests to locate it.
4. Reply *Yes* if the system suggests to locate the magazine fiducial mark.

   If the automatic magazine location fails, center the cross hairs on the fiducial mark manually and select *Ready*.

   A camera window is shown. The window layout (without the camera view) is shown in the miniature figure to the left.

5. Center the cross hairs on the component in the pick position by using the trackball, see Figure 5-36. ALM8 and ALM1216 magazines are centered in both directions. The other tape magazine types are centered in the X direction only.

   If a phase displacement has occurred in an Agilis M8 magazine, adjust as described on page 5-41.

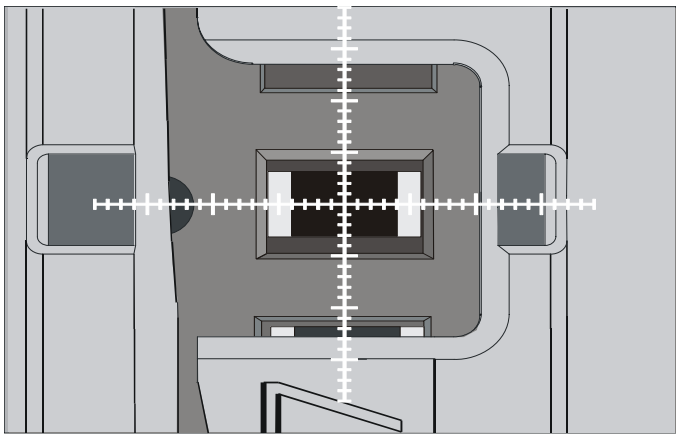

Figure 5-36. Camera view of component pick position.

   Figure 5-36 shows an Agilis tape magazine. A menu, located in the upper left corner of the window, is described on page 5-39.

   In the lower left corner of the window, the component and package names are shown. The distance, in the X direction, between the magazine fiducial mark and the current position is also shown here.
6. Select *Ready* in the menu.

This procedure calibrates the feeder pick position in the following way:

- An ALM8 or ALM1216 magazine is calibrated in both directions.
- An AM8 magazine is calibrated in the X direction only. Adjustment in the Y direction is performed mechanically, see the *Pick Line Adjustment – Agilis M8* section on page 5-42.
- A TM magazine is calibrated in the X direction only. Adjustment in the Y direction is performed mechanically, see the *MY100, Service Manual*.

Location menu

The location menu in the upper left corner of the window is described below.

```
Locate magazine:
 ALM8-1234
 Feeder: [***]
 [***] side
Step length: 4mm

Step
Jog

Ready
Cancel
```

Locate magazine

Magazine name.

[***] = Current number.

Feeder: [***]

Feeder number.

[***] = *Right* or *Left*.

[***] side

This text is shown only in the right and left side of the component, after toggling with the <F3> *Toggle side* key, see below.

Step length

Tape advancement length in mm per component feed.

Step

Performs a component feeding step.

Jog

Moves the tape in small steps to get a component in the pick position.

Ready

Confirms the position and saves the setting.

Cancel

Cancels the procedure without saving the setting.

Command keys

Right arrow – Next feeder

The <right arrow> key moves the cross hairs to the next feeder.

Left arrow – Previous feeder

The <left arrow> key moves the cross hairs to the previous feeder.

F3 – Toggle side

Toggles between center, left, and right side of the component. Selected side is indicated in the menu box, see above. This option is shown only if the loaded component has at least two defined lead groups.

Ctrl+F3 – Toggle component outline

Toggles a graphic outline of the component on and off. The symbol is a rectangle with a dot for each lead. Lead 1 is marked with a circle to indicate the component type and angle. The graphic symbol may differ somewhat from the actual component size.

+ and - – Rotate component

Rotates the component in steps of plus or minus 90 degrees.

F4 – Step feeder

Performs a component feeding step. The same function as the *Step* option in the menu, see above.

This command is shown only if there are components in the feeder.

F5 – Jog feeder

Moves the tape in small steps to get a component in the pick position. The same function as the *Jog* option in the menu, see above.

Ctrl+T – Hide text

Toggles between hide and show mode for screen text. Hide mode offers an undisturbed camera view.

Adjusting a Phase Displacement – Agilis M8

When loading an Agilis M8 magazine, a standard 4 mm pitch component tape can get into a position where the components are located on each side of the pick position, see Figure 5-37. This is called phase displacement.

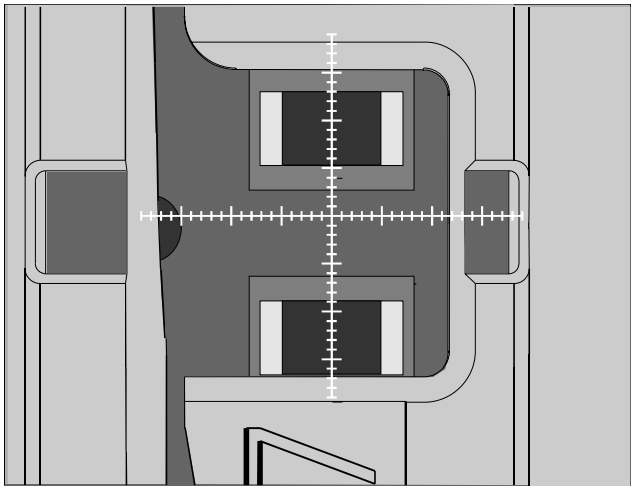

Figure 5-37. Phase displacement.

A phase displacement can be adjusted by making a 2 mm feeding step, preferably when locating the pick position. This is done by pressing <F5> or selecting *Jog* in the top left menu of the camera window (described above).

If a phase displacement occurs in operation, a step error recovery feature in TPSys will automatically start. This feature makes a 2 mm step after some unsuccessful pick attempts and resets to normal 4 mm steps if the following pick attempt is successful.

Pick Line Adjustment – Agilis M8

The pick line in an Agilis M8 magazine is adjusted mechanically in the Y direction.

You can do the adjustment with the magazine inserted in the machine and instantly see the result in the camera window (described on page 5-38), which is supposed to be opened.

A pick line adjustment is performed as follows:

1. Select feeder 1 for the camera view.
2. Make a feed step in feeder 1 by pressing <F4> or selecting the *Step* option in the menu.

   This is to assure that a component is in pick position.
3. Use a 3 mm Allen key to turn the adjustment screw at feeder position 1.

   The adjustment screws are found on top of the magazine, see Figure 5-38.

   Adjust the pick position in the Y direction so that the cross hairs are positioned in the component center as shown in Figure 5-36.

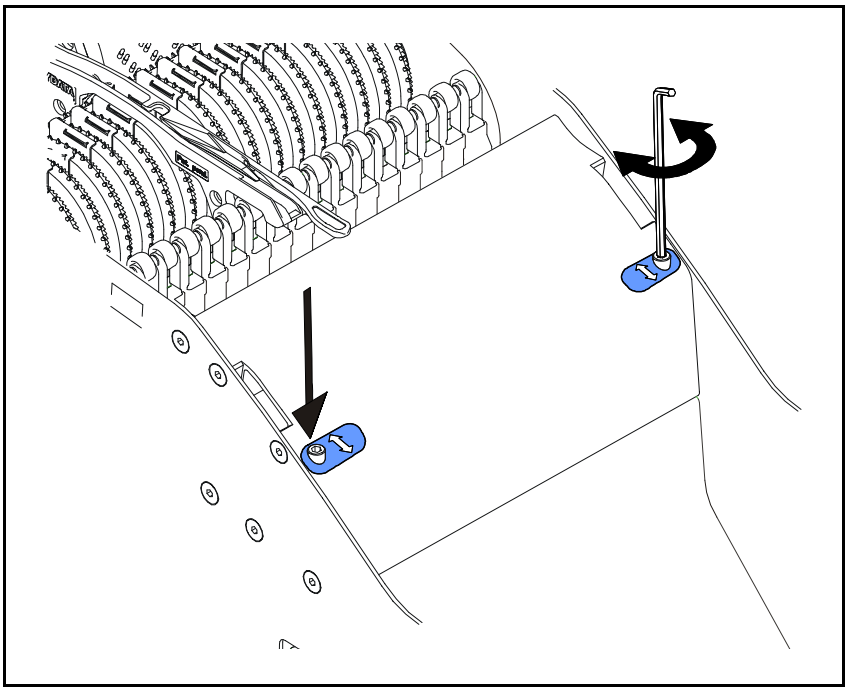

Figure 5-38. Adjustment screws for the pick line.

4. Repeat the previous steps for feeder position 16.

6. Stick Magazines

There are two different stick magazine types for MYDATA pick and place machines:

- Agilis Stick Magazine, ASM.

  This is a stick magazine in the Agilis family.

- Stick Magazine, VMF30.

  The VMF30 magazine family is an older stick magazine type.

This chapter describes these magazine types and how to use them. But, before that, a few words about component sticks.

Component Sticks

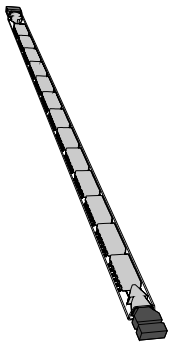

Some components are delivered in plastic sticks, also called tubes. These sticks protect components during shipping and provide proper component location and orientation.

Agilis Stick Magazine, ASM

The Agilis Stick Magazine is described in the following sections:

- *Product Overview* contains a functional description of the magazine. It includes a product overview in which all magazine main parts are described in order to illustrate the concept of the magazine.
- *Performance* has some tips about how to rise the mount speed, and it describes the magazine feeding steps and magazine limitations.
- *Loading a Magazine* describes how to load a feeder in the magazine.
- *During Operation* describes how to refill feeders and pick error causes.
- *Unloading a Magazine* describes how to unload a feeder and ways to store the pallet with included components.

After descriptions of the stick magazines, there is a section about how to update TPSys with data for loaded stick magazines.

Product Overview

Figure 6-1 points out the main parts of the Agilis stick magazine unit. These parts are briefly mentioned below and detailed in the following sections.

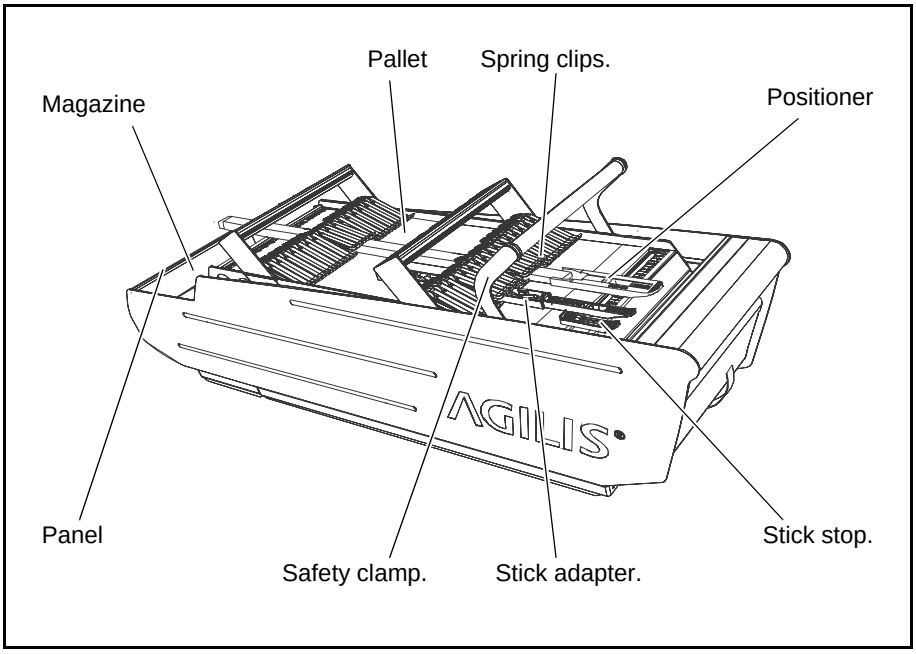

Figure 6-1. Main parts of the Agilis stick magazine unit.

The Agilis stick magazine unit has the following main parts:

Magazine

An Agilis Stick Magazine, ASM, is a carrier for a pallet and it contains a feeding device.

Pallet

An Agilis Stick Pallet, ASP, contains a feeder area where the sticks are inserted. The pallet is put on top of a magazine.

Spring clips.

There are two spring clips on each feeder position that hold the stick in position.

Positioner

A guide head that keeps a component in the correct pick position.

Stick stop.

A stop without any guide head. This can be used instead of a positioner for a stick with a slot in the end.

Stick adapter.

A guide for small component sticks.

Safety clamp.

Prevents fingers from getting beyond the safety shield of the machine.

Panel

Contains status LEDs for sixteen feeders and a button to make the machine stop picking from the magazine.

Magazine

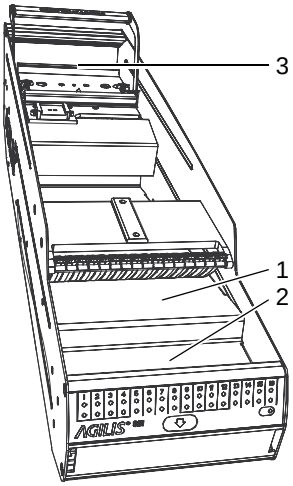

An Agilis Stick Magazine, ASM, contains mainly the drive device for component feeding and the panel (described on page 6-6).

There is a space ('1' in the figure) intended for full component sticks. This space has also spring clips to hold the sticks. Open these clips by pressing the arms before withdrawing any stick (the end plugs can otherwise be removed by the clips, which may result in dropped parts).

There is a small space (2) intended for stick plugs and positioners not currently used. Under the pick position, there is a bin (3) for dropped components.

Pallets and magazines have no individual relation to each other. Any pallet can operate with any magazine. A magazine can thus be exchanged with no programming or other action. This makes it possible to keep the number of needed magazines low. You only need as many magazines as you simultaneously use in the machines.

No magazine identification is shown by TPSys in any production mode.

Pallet

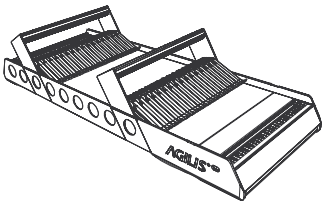

ASP10

An Agilis Stick Pallet, ASP, contains mainly a feeder area with default positions.

The pallet has an identity read by TPSys. This identity consists of pallet type, serial number, and name. The latter can be renamed by the user. Each feeder position has its own identity, consisting of the feeder number 1–16. This makes it possible for TPSys to store individual feeder data for all pallets.

There are two types of pallets:

ASP10

This type is used for component sticks with a maximum height of 10.5 mm.

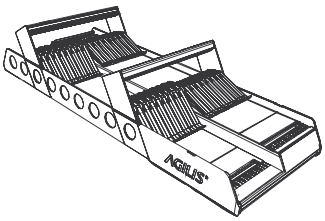

ASP1028

ASP1028

This is a mixed type for component sticks with a maximum height of 10.5 mm and 28.5 mm. In this type the first eight feeder positions are for 10 mm and the second eight (9–16) for 28 mm. If you re-define feeder positions, make sure that position 1–8 are located on the higher part of the feeder area and 9–16 on the lower part.

Components in feeder position 9–16 cannot be picked with the HYDRA mount head.

Feeder width 10 mm cannot be used in the positions 9 and 16.

There is a fiducial mark on each side of the pallet, in the pick line. These are used to locate the pallet in the machine in the same way as for other magazines.

There is a hole on each side of the pallet, under the positioner slot. Dropped components can be removed through these holes by tilting the pallet.

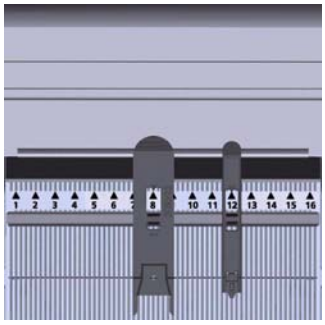

Feeder positions

There are sixteen default feeder positions on a pallet, each of which with a width of 10 mm. However, any feeder position can be defined anywhere on the feeder area. A good reason to use the default positions is that these can be used without locating the pick positions by using the camera.

Each feeder position is marked with a barcode and a feeder position number. The barcode contains information about the pallet identity and the feeder position number. Only the loaded component type and the load direction has to be added before the machine can use the feeder.

The barcodes are located on the two handles, over the feeder positions. The feeder number figures are located beside the feeder positions.

The number of feeders is limited to sixteen by TPSys.

Spring Clips

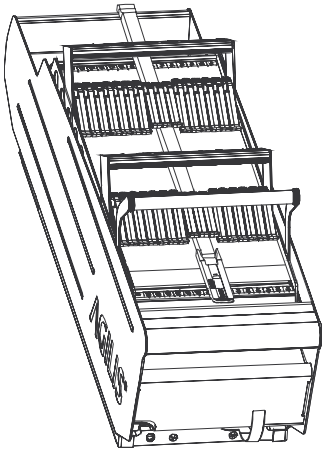

Each default feeder position has two spring clips to hold the stick during operation. When loading component sticks, these are simply pushed under the spring clips along the feeder positions.

Positioner

There are several positioners for this magazine type, covering the most common package types. Some of these positioners are available for two stick widths, standard and wide stick. New positioners for additional packages and sticks will gradually be added. Contact MYDATA to get the latest list.

All Agilis positioners are fixed to the pallet by being snapped into a slot. If a default feeder position is used, the feeder position number is visible through a hole with an arrow in the positioner.

On page 6-13 there is a table containing all available positioner types at the time of issuing this document.

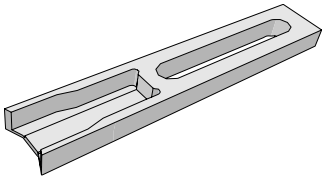

Positioners for the previous VMF30 type magazine can be used also in this magazine. Such positioners are fixed with screws and nuts from a VMF Positioner Adapter Kit. They are to be adjusted to a position where the center of a component in the pick position is in the pick line, marked with a groove on the feeder area. All feeders with this type of positioner have to be located by using the camera before operation (after being mounted, moved, or adjusted).

Stick Stop

A stick stop is used instead of a positioner for a component stick with a slot. The stop is fixed to the pallet by being snapped into the slot.

Stick stops have to be adjusted to a position where the center of a component in the pick position is in the pick line, marked with a groove on the feeder area. This setting can be saved for the current package if the setting screw is not loosened until the next usage.

There are two types of stick stops, one type for 10 mm package height and one type for 28 mm package height. The latter has longer snap device that makes it impossible to snap to a 10 mm pallet feeder area.

All feeders with stick stops have to be located with the camera before operation (after being mounted, moved, or adjusted).

The stick slot length should be 120 % of the package length.

Stick Adapter

A stick adapter is used to keep small component sticks. Short sticks are held with one spring clip only, which is not enough for some sticks. Such a stick is inserted in a stick adapter, which keeps the stick in position.

The stick adapter has studs underneath, which fit to the feeder area grooves. This keeps the adapter with the stick parallel to the pallet and centered to a default feeder position.

Safety Clamp

The function of the safety clamp is mainly to close the opening between the magazine and the safety shield of the machine and thereby prevent fingers from getting beyond the shield.

The safety clamp prevents also from removing a pallet when the magazine is inserted in a machine. And, it also prevents from disabling any safety device if a magazine is inserted without a pallet.

CAUTION! Never insert a magazine into a machine without a pallet.

WARNING! The safety clamp must be in order at operation. If it is defect in any way, it must be replaced.

Magazine Panel

An ASM magazine has a panel that is visible during operation. This panel contains status LEDs and a button. The panel is shown in Figure 6-2 and is further described below the figure.

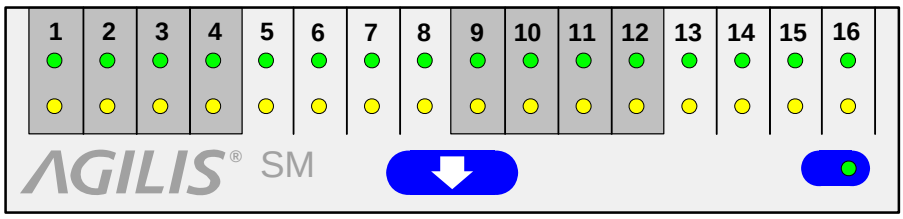

Figure 6-2. ASM magazine panel.

The upper part of the panel contains two horizontal lines of feeder status LEDs, one upper line with green LEDs and one lower line with yellow LEDs. These are grouped to be one green and one yellow LED for each feeder position.

The lower part of the panel contains a release button in the middle and a magazine status LED to the right.

The functionality, which is identical to other MYDATA magazines, is described below.

Feeder status LEDs

A green and yellow LED pair for each feeder position indicates the current status as described in the table.

LEDs		Feeder status
Green	**Yellow**	
Off	Off	Feeder not used in loaded layout.
Off	Blinking	Pick error.
Blinking	Off	Feeder used in loaded layout. Short supply of components.
On	Off	Feeder used in loaded layout. Large supply of components.

Release button

Pressing the release button, marked with a down arrow on the panel, results in the following two actions:

- The machine stops picking from the magazine.
- Existing errors for the magazine are reset (the same reset action as an insertion or a removal of a magazine).

Magazine status LED

The green magazine status LED, to the right on the panel, indicates the current status as shown in the table.

Green LED	Magazine status
Off	The machine has stopped picking from the magazine. The magazine is ready to be pulled out.
Blinking	The release button has been pressed. The machine is about to stop picking from the magazine.
On	The magazine is inserted in the machine and accessible to TPSys.

To consider at operation

Always make sure the green magazine status LED and the green feeder status LEDs for used feeders are on when inserting the magazine in a machine.

CAUTION! Always wait until the green magazine status LED is off before pulling a magazine out. Otherwise, the mount head can be damaged.

Performance

This section contains information about:

- How to rise the mount speed.
- Magazine feeding steps.
- Some limitations for the magazine.
- Maintenance

Mount Speed

There are ways to boost the mount speed when using the Agilis stick magazine unit. Some of these are described below.

Fill the pallet

Load as many HYDRA mountable components as possible in adjacent default feeder positions. If a layout contains only a few component types in sticks, load several sticks containing the same component type for the most frequent types used.

The more components the HYDRA mount head can pick simultaneously for a layout, the less number of pick movements. This boosts the mount speed.

And, the more components loaded in the magazine, the less number of stops are required for refilling components.

Use extra pallets

If there are extra pallets, these can be loaded during mounting. When a pallet in operation runs out of components, replace the entire pallet.

A pallet can also be loaded for the next job while the current job is running.

Use two magazine units

The most efficient way is to use two magazine units inserted in two magazine positions. One magazine can then be refilled while the other one is in operation. There will be no refill stop at all. This is, however, only possible if there is an extra magazine position available in the machine for this purpose.

Store pallets loaded for recurrent layouts

The change-over time can be reduced by storing pallets loaded for recurrent layouts. Complete sets of components are then ready for running with all feeder data already known by TPSys.

This is most applicable to recurrent jobs with short run time.

Feeding

The component feeding in the magazine is explained below together with default and extra feeding steps.

Feeding speed

The feeding speed for a component in a stick is nominal 2.7 mm per feeding step. This makes a feeding speed of approximately 15 mm per second.

Feeding step

One feeding step is defined as one feeding movement (a forward and backward movement cycle generated by the magazine).

Default package feeding steps

TPSys automatically calculates the default number of feeding steps, based on the package length in the feeding direction.

The following table shows the approximately number of default feeding steps for various package lengths. The table gives a hint about how much an extra step represents when adding extra feeding steps.

Package length	Feeding steps
0–3.1 mm	2
3.1–5.3 mm	3
5.3–7.4 mm	4
7.4–9.6 mm	5
9.6–11.8 mm	6
11.8–13.9 mm	7
13.9–16.1 mm	8
For each further 2.2 mm.	1 additional step.

Adding extra feeding steps

Extra feeding steps can be added if a component is not fed enough. This can be done in the following two different ways:

Do not add more feeding steps than required.

- Add extra steps for the component type. Select *Edit* > *Components* in the TPSys main window, select the component from the list, add extra steps in the *Extra ASM feeding steps* box.

  This option affects all feeders that will later be loaded with the same component type.

Do not add more feeding steps than required.

- Add extra steps to the current feeder only. Select *Magazine* > *Magazines* in the TPSys main window, select the magazine from the list, select the feeder from the list, add extra steps in the *Extra feeding steps* box.

  This option affects the selected feeder only. As soon as this feeder is loaded with another component type, the extra step setting is gone.

Component Size and Weight

Physical component limitations are summarized below.

Maximum height

Stick height = 10.5 mm in pallet ASP10.
Stick height = 28.5 mm in pallet ASP1028.

Maximum length and width

Component length = maximum 50 mm in the feed direction.

Other maximum measures are limited by the machine centering system used.

Maximum weight

Total load on the pallet (components with sticks) = 1.5 kg.

Single component weight is limited by the mount tools used.

Maintenance

No part of the Agilis stick magazine unit requires any scheduled preventive maintenance. Just keep the magazine unit clean from dropped components and other objects, dirt and liquids.

Loading a Magazine

An Agilis Stick Pallet is loaded and located in the following steps, further described in the subsequent sections:

- Find a positioner (page 6-12).
- Choose a feeder position (page 6-14).
- Arrange a feeder (page 6-14).
- Load the component stick (page 6-15).
- Register the feeder (page 6-16).
- Insert the magazine unit into the machine (page 6-16).
- Locate the pick position, if required (page 6-17).

The instructions in this section describes one feeder only. Repeat the described acts for all feeders to be loaded.

Finding a Positioner

There is a number of ways to find a suitable positioner. As a guide, you can follow the step sequence below and then choose feeder position when you have found a suitable positioner, or a stick stop.

1. Look for a positioner marked with the current package type.
   - If you find such a positioner, test if it has a stick guide that fits the current stick.
   - If the found positioner has a stick guide that does not fit, look for a wide stick positioner for the same package type.
2. Look for an alternative positioner.

   Measure the package width, length (in the feeding direction), and height. Then, try to find an alternative positioner in the table on the next page, containing the component space dimensions for available positioners.
   - If you find one or more suitable alternative positioners in the table, check if you have these on hand.
   - If you have some of these on hand, test if they have stick guides that fit the current stick.
3. Cut the stick guide.

   If you have found a positioner that fits the package but not the stick, you can cut the stick guide and use it without stick guide.
4. Use a positioner for the previous VMF30 type magazine.

   If you have a positioner for the previous VMF30 type magazine that fits the package, use this one.
5. Create a customized positioner.

   A customized positioner can be created from a blank positioner, either by being machined by the customer, or by being ordered from MYDATA.

   A clearance of 0.2–0.5 mm has to be added on each side of the package when creating a new positioner.
6. Choose a stick stop.

   If there is no suitable positioner available, a stick stop can be used. Choose a ’SS10 adj’ type if the stick height is maximum 10.5 mm, or a ’SS28 adj’ type if the stick is higher (maximum 28.5 mm).

Agilis positioner table

The following positioner table includes all positioners available at the time of issuing this document. New positioners for additional packages will gradually be added. Contact MYDATA to get the latest list.

The positioners in the table are sorted by the component space width, length (in the feeding direction), and height to make it easy to find a suitable alternative positioner.

Note the following comments when searching for a suitable positioner.

Width:
Include a clearance of 0.2–0.5 mm on each side of the package in the table value.

Length:
The package length can be 70–100 % of the nominal table value.

Height:
Include a clearance of 0.2–0.5 mm in the table value (covered positioners only).

Positioner:
'WS' means wide stick.

Stick width:
Maximum stick width (positioners with stick guide only).

Type	Width mm	Length mm	Height mm	Positioner	Stick width	✓
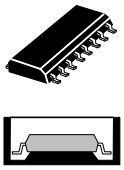	5.9	3.6	1.2	MSOP8/10		
	6.5	5.8	1.8	SO8	8.0	
	6.5	11.0	1.8	SO14/16	8.0	
	6.7	6.1		SO8 HIGH	8.5	
	7.1	3.6	1.2	TSSOP8/10		
	8.7	6.5		SO8W 8.7	11.6	
	8.7	12.2		SO14/16W 8.7	12.0	
	11.3	12.35		SO16W 11.3	15.2	
	11.3	15.0		SO18/20	15.2	
	11.3	15.35		SO18/20	15.2	
	11.3	18.35		SO24	15.2	
	11.3	18.35		SO24 WS20.5	20.5	
	11.3	21.5		SO28	15.2	
	11.3	21.5		SO28 WS20.5	20.5	
	11.3	25.0		SO32	15.2	
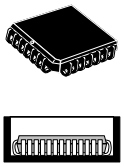	10.5	11.5		PLCC20	12.8	
	13.0	17.3		PLCC28/32	15.2	
	13.0	17.5		PLCC28/32	15.1	
	16.5	18.7		PLCC20 SOCKET	18.5	
	18.1	20.4		PLCC44	21.0	
	18.1	20.6		PLCC44	21.0	
	19.0	23.0		PLCC28/32 SOCKET	21.0	
	21.0	23.5		PLCC52	24.0	
	24.1	26.5		PLCC44 SOCKET	26.0	
	26.1	28.7		PLCC68	29.2	
	26.6	30.0		PLCC52 SOCKET	28.5	
	30.8	33.9		PLCC84	33.7	
	31.7	34.3		PLCC68 SOCKET	33.6	
	36.8	39.5		PLCC84 SOCKET	38.8	
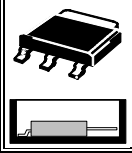	10.9	7.9		DPAK TO-252	20.0	

Blank positioners.

In addition to the positioners in the table, there are blank positioners without any component space. These are intended to be machined to packages not covered by the standard positioners.

Choosing Feeder Position

1. Select pallet.
   - If the highest component stick for all components is maximum 10.5 mm, select an ASP10 type pallet.
   - If any of the sticks is higher than 10.5 mm, select an ASP1028 type pallet that can handle a maximum stick height of 28.5 mm.

     For ASP1028: Low components must not be located in between high components on the positions 9–16 because the mount head may hit adjacent components. The level difference must not exceed 15 mm within a diameter of at least 20 mm.

     For ASP1028: Stick width 10 mm cannot be used in the default feeder positions 9 and 16.
2. Choose a feeder position on the selected pallet.
   - Choose a default feeder position, if possible.

     Default feeder positions with Agilis positioners can be used without being located before operation. For all other options, the pick position has to be located with the camera before operation.
   - Note that components located in feeder position 9–16 on an ASP1028 type pallet cannot be picked with the HYDRA mount head.
   - Consider the mount speed information described on page 6-8.
   - If MYPlan is used, follow the loading instructions given.

Arranging a Feeder

Using an Agilis positioner

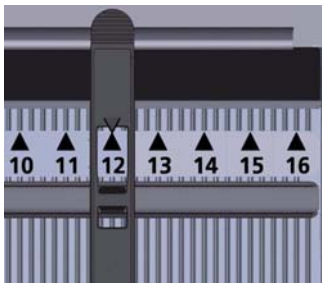

1. Snap the Agilis positioner to the pallet over the selected feeder position number.
2. Check if the feeder number is visible in the middle of the positioner hole.
   - If the feeder number is visible in the middle of the hole, like in the figure (with the arrows pointing towards each other), the positioner is located in a default position.
   - If not, the feeder is not located in a default feeder position, which means that the pick position has to be located with the camera before operation.

Using a previous VMF30 type positioner

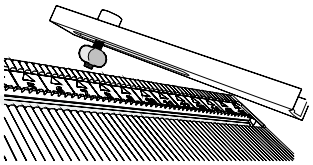

1. Put a screw from a VMF Positioner Adapter Kit through the positioner slot, from the upper side, and put a nut on the screw, under the positioner.
2. Sink the nut down, through the snap slot, turn the screw with the nut 90°, keep the positioner upwards and turn the screw to fasten the positioner.
3. Put a component in the positioner and adjust the pick position in both directions. Make sure the center of the component is located in the pick line, marked with a groove on the feeder area.
4. Fasten the screw properly.

Using a stick stop

1. Snap the stick stop to the pallet at the selected feeder position.

   Note that high ’SS28 adj’ stops for ASP1028 type pallets cannot be snapped to any slot dedicated for low components.

2. Put a component in front of the stop and adjust the pick position. Make sure the center of the component is located in the pick line, marked with a groove on the feeder area.

3. Fasten the screw properly.

Loading a Component Stick

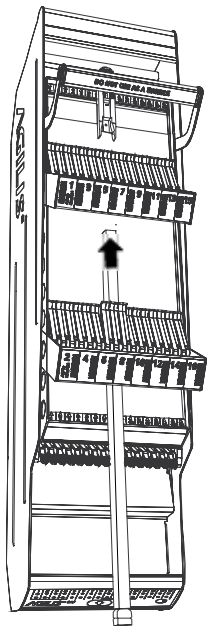

If a positioner is used

1. Make sure the component stick is turned right. The right side up and the right end towards the feeder positioner (corresponding to the component angle).

2. Remove the stick end plug in the pick end of the stick.

3. Push the stick along the feeder position with the pick end first, under the spring clips towards the positioner, see the figure. Keep the stick parallel to the grooves on the feeder area.

   The default feeder positions are located under the feeder barcodes on the handles (not under the feeder numbers).

4. Center the stick end to the positioner and press the stick towards it.

   If the positioner has a stick guide, make sure the stick enters the side guides as well as the bottom guide (all three outside the stick).

If a stick stop is used

1. Prepare the stick before loading by making a slot over the pick position, with a length of 120 % of the package length (in the feeding direction).

2. Load the stick in the same way as described above, but in this case the stick is centered and pushed to the stick stop.

Loading a small stick

If the component stick is small, it is held by one spring clip only. If needed, use a stick adapter for such a stick.

1. Place the stick adapter on the pallet, see the figure.

2. Load the stick into the adapter in the same way as described above.

After loading all sticks

When all sticks are loaded, tilt the pallet to move all components to the front end of the sticks, and the first components into the pick positions. Make sure the components are easily moved into the pick positions.

Registering the Feeder

You have to register the pallet name, feeder number, component type, and the component angle.

You can also register number of components in the stick and a batch ID.

The easiest way to register the feeder data is to scan the component barcode label, and then the magazine feeder barcode, containing the pallet identification and the feeder number, using a MYLabel barcode scanner. This can be done without inserting the magazine in the machine. So, while the machine is running and picking from a magazine, you can load and register another pallet for the same layout or for the next job.

The usage of a MYLabel system, including component labelling, is described in the *MYLabel, User's Manual*.

It is also possible to register feeder data by using a TPSys barcode scanner, or by entering the data manually on the keyboard.

Feeder data entered remains in the TPSys until it is overwritten by new data for the same feeder (or is deleted by the user).

New pallet

If you have a new pallet that has never been used before, nothing extra has to be done to register it. You can, optionally, rename it when it is inserted in a machine, but this is not necessary.

However, to be able to register data offline for a new pallet, you must have inserted it in the machine once.

Inserting the Magazine Unit into the Machine

1. Tilt the pallet to move all components to the front end of the sticks.

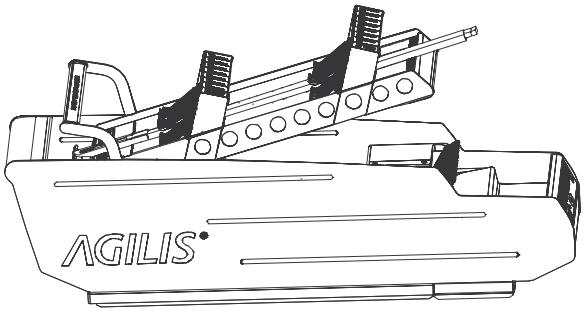

2. Put the pallet in the magazine with the front end first, see the figure. Then, lower the rear section to its place.
3. Push the safety clamp down.
4. Insert the magazine unit in the machine.
5. Make sure the green magazine status LED and the green feeder status LEDs for used feeders are on.

Do not start the machine until you have located the pick positions as described in the next section.

Locating Pick Positions

Agilis positioners on default feeder positions

If you have used Agilis positioners to all loaded sticks and put them on default feeder positions, then you do not need to locate any pick position.

All other arrangements

Feeder positions that are not arranged in this way have to be located as described below.

The camera view window is described on page 6-26.

1. Open the camera view window in one of the following ways:
   - Select *Magazine* > *Magazines*, select the current magazine, select feeder, press <F1>.
   - Select *Magazine* > *Locate Feeder Positions*, select the current magazine, select feeder.

   If the magazine is not located, the system suggests to locate it.

If the automatic magazine location fails, center the cross hairs on the fiducial mark manually and select *Ready*.

2. Reply *Yes* if the system suggests to locate the magazine fiducial mark.
3. Center the cross hairs on the component in the pick position, see Figure 6-3. If the first component is not fed to the pick position, feed it by pressing <F4> (*Step feeder*).

For big components, too big for the camera view, there is a small hole in the positioner, at the center of the component position. For such positioners, center the cross hairs on the hole with no component in the pick position.

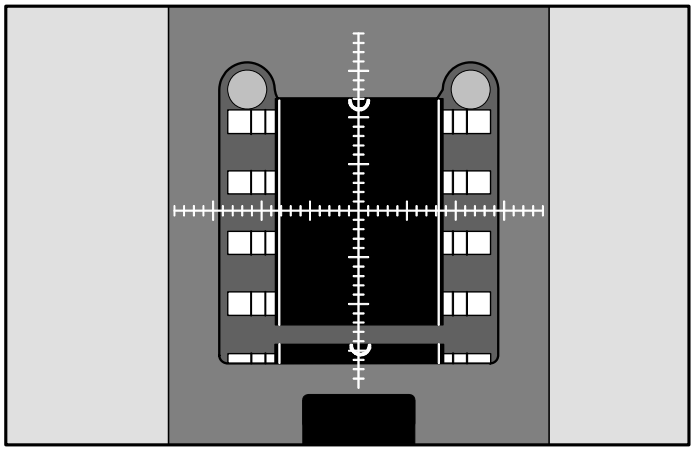

Figure 6-3. Locating the pick position.

4. When the cross hairs are centered on the component, select *Ready*.

After updating TPSys, see page 6-22, the magazine is ready for operation.

Location in the Y direction

The described location applies to the X direction only. Location in the Y direction is performed automatically each time the magazine unit is inserted in the machine. Location in the Y direction is, however, performed for the complete magazine unit, which means that the system does not locate each feeder individually. This makes it important that the center of all components in pick positions are located in the pick line, marked with a groove.

During Operation

Refilling Components

1. Press the button on the magazine panel.
2. Wait until the green magazine status LED is off.
3. Pull the magazine unit out approximately two decimeters.
4. Pull up the safety clamp.
5. If you want to change the pallet, lift it off. Otherwise, let it be on the site.
6. Remove the empty stick.
7. Load a new stick as described in the *Loading a Component Stick* section above. Make sure the new stick contains the same component type.
8. If you want to register the number of components in the stick and the batch ID, scan the label or type in the information.
9. Insert the magazine as described in the *Inserting the Magazine Unit into the Machine* section above.

You do not need to locate feeders loaded with the same type of component.

Pick Errors

No component in the pick position.

Make sure the stick is centered to the positioner.

Insufficient feeding.

Add one or more feeding steps, see page 6-9.

A rule based on experience tells that if the components in a stick starts moving when the stick is tilted to an angle of approximately 30 degrees, then extra feeding steps should not be required.

Bad feeding and a changed magazine sound.

There is probably some dropped component or other object between the magazine and the pallet.

Lift the pallet and clean it underneath. Clean the magazine, especially at the feeding movement transmission head. When the pallet is put back on the magazine, it should be no forwards/backwards play between the magazine and the pallet.

Component caught in a covered positioner.

The component underpass height is not adequate. Try another positioner.

Bad feeding from a wide stick.

A wide stick held by at least three spring clips may have got a small impact by the middle clip. Hang the middle clip on the other two clips with a match, toothpick, or similar. See the figure.

Unloading a Magazine

Remove the pallet from the machine in the same way as described for refilling components on the previous page.

When the pallet is removed, you can either store the pallet loaded or unload the components.

Storing the loaded pallet

This option is best for pallets loaded with components for recurrent jobs, and for pallets loaded with common components for different jobs.

If you store the pallet loaded, you do not need to locate pick positions or register component types and quantities next time you use it. All feeder data is then known by TPSys.

Unloading the components

If you unload the components from the pallet, consider the following points.

- Covered positioners contain two components, one in the pick position and one in the underpass.
- Agilis feeder stops can be stored with the setting preserved.

  Remove the stops from the pallet without loosening the setting screws and, preferably, store them together with the component sticks. Next time these component types are to be used, the stops can be snapped to the pallet with the pick line preserved.
- Feeder stops for the previous VMF30 type magazine cannot be stored with preserved setting.

Stick Magazine, VMF30

A VMF30 stick magazine has a capacity of max 18 sticks in various sizes. All stick sizes can be loaded in this magazine type.

Component sticks are loaded in three sections on top of the magazine. The first component in each stick is guided into correct pick position by a positioner (also called fork). There are positioners available for the most common sticks and components.

VMF30 stick magazines use vibrations to feed components into pick positions. Vibration parameters for component feeding (vibration time, frequency, and amplitude) are set in TPSys. These parameters can be set individually for the three feeding sections.

Loading a VMF30 Magazine

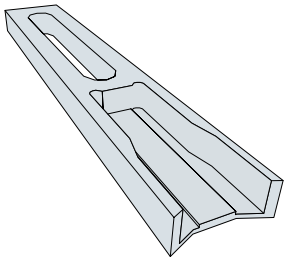

Load a component stick as follows:

1. Mount a positioner for the current package.
2. Insert the component stick and push it gently into the positioner.
3. Put the first component into the positioner and ensure that it is located in correct pick position.

   The center of the pick position is marked with a notch in the positioner and recesses in the bottom plate, see Figure 6-4.

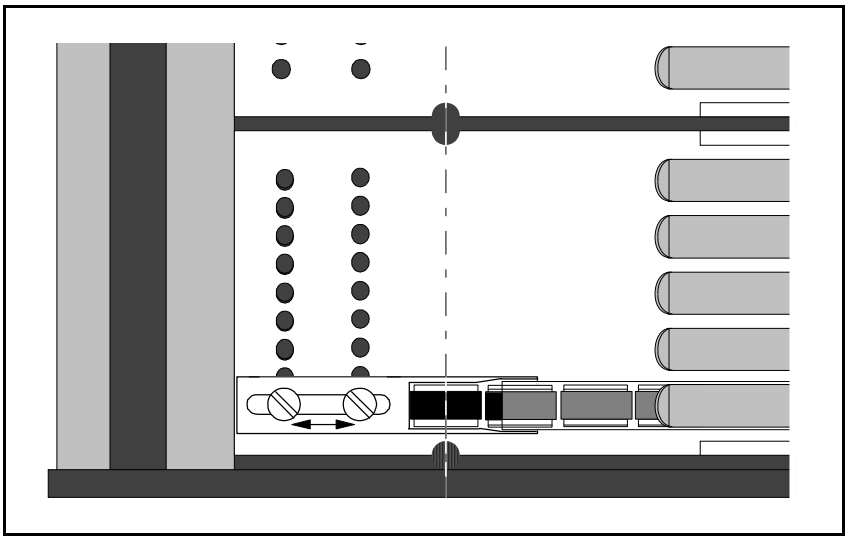

Figure 6-4. Component stick and positioner.

4. Adjust the positioner if the component is not in correct pick position, see the arrow in Figure 6-4.

The pick position must be located if the positioner is changed, moved, or adjusted, see the next section.

Locating Pick Positions

If a positioner is changed, moved, or adjusted the pick position must be located as described below.

The camera view window is described on page 6-26.

1. Open the camera view window in one of the following ways:
   - Select *Magazine* > *Magazines*, select the current magazine, select feeder, press <F1>.
   - Select *Magazine* > *Locate Feeder Positions*, select the current magazine, select feeder.

   If the magazine is not located, the system suggests to locate it.

If the automatic magazine location fails, center the cross hairs on the fiducial mark manually and select *Ready*.

2. Reply *Yes* if the system suggests to locate the magazine fiducial mark.
3. Center the cross hairs on the component in the pick position, see Figure 6-5. If the first component is not fed to the pick position, feed it by pressing <F4> (*Step feeder*).

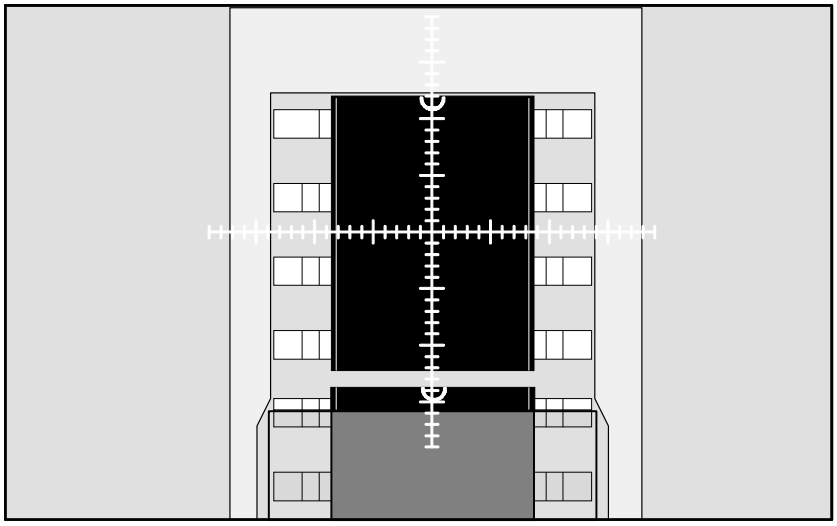

Figure 6-5. Locating the pick position.

4. When the cross hairs are centered on the component, select *Ready*.

After updating TPSys, see page 6-22, the magazine is ready for operation.

Location in the Y direction

The described location applies to the X direction only. In the Y direction, the positioner has to be adjusted mechanically, see the arrow in Figure 6-4.

Updating TPSys

When magazine feeders have been loaded, their feeder contents must be updated in TPSys. This is done by updating the magazine data in the TPSys editors described on the following pages.

Magazines Window

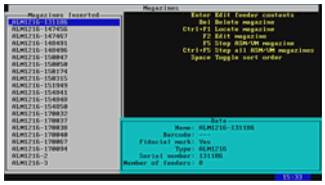

To open the *Magazines* window, select *Magazine* > *Magazines* in the main menu.

The *Magazines* window layout is shown in the miniature figure to the left. All included entries are described below.

Command keys

Del – Delete magazine

A magazine can be deleted provided the magazine is not inserted in the machine. All magazine information is erased if a magazine is deleted.

Ctrl+F1 – Locate magazine

By pressing <Ctrl> + <F1>, the X position of the selected magazine is located using automatic fiducial mark search. If the automatic fiducial mark search fails, you can center the fiducial mark manually by using the trackball. See also the *Locate All Magazines* section under *Magazine* in *Appendix A – Menu Reference Guide*.

The Y position is adjusted mechanically, see the *MY100, Service Manual*.

F2 – Edit magazine

The highlighted magazine can be renamed and the barcode can be changed by pressing <F2> and typing a new name or reading a new barcode (see below).

F5 – Step ASM/VM magazine

Performs feeding steps in a selected stick magazine.

Ctrl+F5 – Step all ASM/VM magazines

Performs feeding steps in all inserted stick magazines.

Names

This list shows the magazines in the machine and in the machine network, if shared databases are used.

Default sort order is alphabetical. By pressing <Space> once, the sort order is changed to show all magazines inserted in the machine, sorted by magazine positions. After these magazines, magazines inserted in other machines are shown, sorted by machine and magazine positions. By pressing <Space> again, the sort order is changed to show those magazines which contain components included in the loaded layout.

Magazine position numbers are shown in brackets, if inserted in the machine. No position number is shown for magazines registered but not inserted.

( ) If shared databases are used, then the machine number is also shown in brackets for magazines inserted in other machines, for instance (my9n491/8) if the magazine is inserted in magazine position 8 in a MY9 machine with serial number 491.

* An asterisk (*) indicates that the magazine contains components included in the currently loaded layout.

Data

This box contains data for the magazine selected in the *Names* list.

Name

User name of the magazine.

If no user name is assigned, this field shows the magazine type followed by the serial number, for instance VM30-9867.

The magazine name can be changed by pressing <F2>.

Barcode

Agilis ASM stick magazines only:

A barcode can be used to inform TPSys which type of component is loaded in a specific feeder. All feeders have unique barcodes on the Agilis pallets. You use this feature by scanning the barcode on the component stick and then the barcode on the Agilis feeder.

VMF30 stick magazines only:

A barcode can be used to inform TPSys which type of component is loaded in a specific feeder in a specific VMF30 magazine. All VMF30 magazines have unique barcodes. Further information about barcode reading is found in Chapter 11.

Barcodes can be changed by pressing <F2> and using the barcode scanner.

Fiducial mark

Indicates if automatic magazine fiducial mark search is active or not.

Type

The magazine type. This is read from the magazine, which means that it cannot be changed in this box.

Serial number

The magazine serial number. This is read from the magazine, which means that it cannot be changed in this box.

Number of feeders

The number of feeders in the magazine. This is read from the magazine, which means that it cannot be changed in this box.

Feeder Contents Window

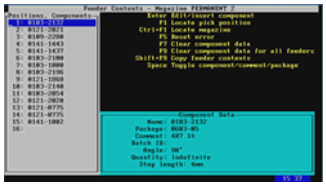

To open the feeder contents window, select magazine and press <Enter> in the *Magazines* window (page 6-22).

This window is entitled *Feeder Contents - Magazine [***]*. The [***] string is a substitute for the magazine name.

The feeder contents window layout is shown in the miniature figure to the left. All included entries are described below.

VMF30 magazines only.
ASM magazines only.

These comments mean that the entries are included in windows for the specified magazines only.

Command keys

F1 – Locate pick position

The feeder pick position can be located by pressing <F1>. The procedure is described on page 6-26.

Ctrl+F1 – Locate magazine

By pressing <Ctrl> + <F1>, the X position of the selected magazine is located using automatic fiducial mark search. If the automatic fiducial mark search fails, you can center the fiducial mark manually by using the trackball. See also the *Locate All Magazines* section under *Magazine* in *Appendix A – Menu Reference Guide*.

The Y position is adjusted mechanically, see the *MY100, Service Manual*.

F5 – Reset error

Key <F5> resets a feeder error. This is used if an error is caused by a programming error that does not require physical feeder manipulation.

F7 – Clear component data

Key <F7> clears the contents of the selected feeder.

F9 – Clear component data for all feeders

A magazine can be cleared from all components by pressing <F9> and confirming the deletion.

Shift+F9 – Copy feeder contents

The magazine feeder contents can be copied from another magazine by pressing <Shift> + <F9> and typing the magazine name to copy from (or pressing <Tab> or <Enter> and selecting magazine from a magazine list).

Positions, Components / Positions, Comments / Positions, Packages

This box shows the components loaded in the magazine feeders.

The default display mode is *Positions, Components*. By pressing <Space> the display mode is changed to *Positions, Comments*. By pressing <Space> again the display mode is changed to *Positions, Packages*.

* An asterisk (*) indicates that the magazine contains components included in the currently loaded layout.

Component Data

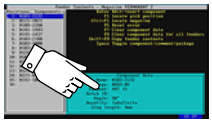

Name

The name of the component in the feeder.

You can change a component by selecting from the *Components* window. Just enter the first characters of the component name and press <Enter>, or simply press <Enter>.

Package

The component package type, set in the *Components* window.

Comment

User comment text, set in the *Components* window.

Batch ID

This field is intended for component batch number found on, for instance, the plastic stick, storage box, or delivery note.

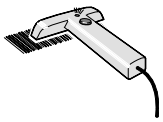

The batch number can be either typed into this field or read using a TPSys barcode scanner.

The TPSys optional barcode scanner is described in Chapter 11.

Angle

The component angle in the feeder. Can be 0°, 90°, 180°, or 270°/–90°.

Quantity

The component quantity in the feeder.

The quantity is to be updated when loading the removable feeder. The value is then counted down each time a component is taken. The remaining number of components is indicated in this field.

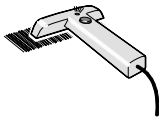

The quantity can be either typed into this field or read using a TPSys barcode scanner.

The TPSys barcode scanner is described in Chapter 11.

VMF30 magazines only. *Amplitude*

Vibrator amplitude value. The setting range is 0–127. This setting affects all feeders in one section.

VMF30 magazines only. *Duration*

Vibration time in ms. The setting range is 0–8000 ms (0–8 seconds). The vibration time is set individually for the feeders.

VMF30 magazines only. *Frequency*

Vibrator frequency in Hz. The setting range is 10–99 Hz. This setting affects all feeders in one section.

ASM magazines only. *Extra feeding steps*

TPSys automatically calculates the default number of feeding steps for ASM magazines, based on the package length in the feeding direction (described on page 6-9).

This option makes it possible to add extra feeding steps if a component is not fed enough.

This setting affects the selected feeder only. As soon as this feeder is loaded with another component type, the extra step setting is gone.

Camera View Window

This section describes the camera view window used to locate feeder pick positions.

The camera window layout (without the camera view) is shown in the miniature figure to the left. All included entries are described below.

Open the camera view window as follows:

1. Select *Magazine* > *Locate Feeder Positions* in the main menu.
2. Select magazine in the list.
3. Select a feeder to locate, or select all feeders.

   If the magazine is not located, the system suggests to locate it.
4. Reply *Yes* if the system suggests to locate the magazine fiducial mark.

If the automatic magazine location fails, center the cross hairs on the fiducial mark manually and select *Ready*.

In the lower left corner of this window, the component and package names are shown. The distance between the magazine fiducial mark and the current position is also shown.

A pick position location is performed by centering the cross hairs on the component in the pick position, see Figure 6-6. The first component can be fed into the pick position by pressing <F4> (*Step feeder*).

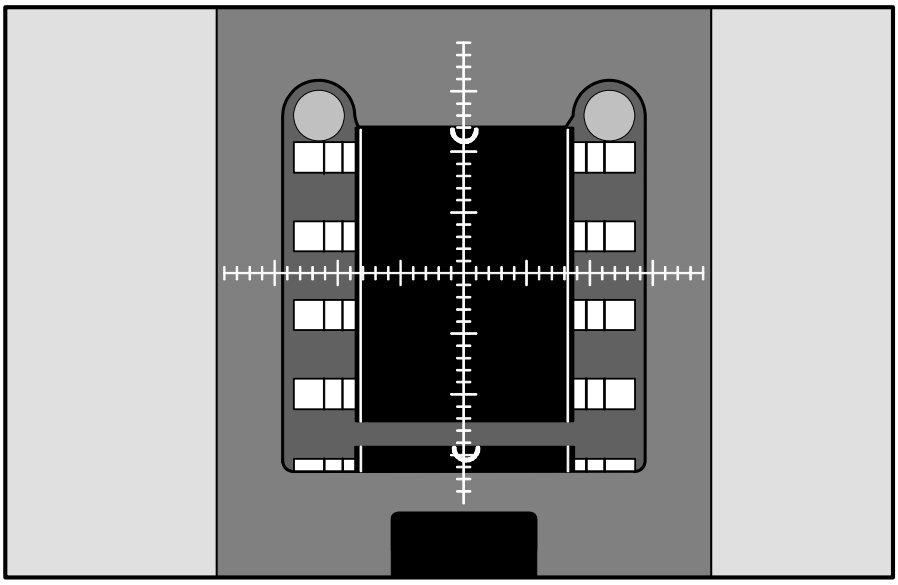

Figure 6-6. Locating the pick position in an ASM magazine.

Location menu

The location menu in the upper left corner differs for the various magazines. These menus are shown below and all included options are described.

```
Locate magazine:
 ALM8-1234
 Feeder: [***]
 [***] side
Step length: 4mm

Step
Jog

Ready
Cancel
```

All tape magazines.

```
Locate magazine:
 ASM-1234
 Feeder: [***]
Extra step length: 0

Step
Jog

Ready
Cancel
```

ASM stick magazines.

```
Locate magazine:
 VM30-9867
 Feeder: [***]
Amplitude: 100
Frequency: 57
Duration: 1s

Step

Ready
Cancel
```

VMF30 stick magazines.

Locate magazine

Magazine name.

[***] = Current number.

Feeder: [***]

Feeder number.

[***] = *Right* or *Left*.

[***] side

This text is shown only in the right and left side of the component, after toggling with the <F3> *Toggle side* key, see below.

Step length

Tape advancement length in mm per component feed.

Extra step length

TPSys automatically calculates the default number of feeding steps for ASM magazines, based on the package length in the feeding direction (described on page 6-9).

This option makes it possible to add extra feeding steps if a component is not fed enough.

This setting affects the selected feeder only. As soon as this feeder is loaded with another component type, the extra step setting is gone.

Amplitude

Vibrator amplitude value. The setting range is 0–127. This setting affects all feeders in one section.

Frequency

Vibrator frequency in Hz. The setting range is 10–99 Hz. This setting affects all feeders in one section.

Duration

Vibration time in ms. The setting range is 0–8000 ms (0–8 seconds). The vibration time is set individually for the feeders.

Step

Performs a component feeding step.

VMF30 only: Feeder section 1 vibrates if feeder 1–10 is selected, section 2 feeder 11–20, section 3 feeder 21–30.

Jog

Makes small feeding movements to get a component in the pick position.

Ready

Confirms the position and saves the setting.

Cancel

Cancels the procedure without saving the setting.

Command keys

All of the commands below are not shown for all magazine types.

Right arrow – Next feeder

The <right arrow> key moves the cross hairs to the next feeder.

Left arrow – Previous feeder

The <left arrow> key moves the cross hairs to the previous feeder.

F3 – Toggle side

Toggles between center, left, and right side of the component. Selected side is indicated in the menu box, see above. This option is shown only if the loaded component has at least two defined lead groups.

Ctrl+F3 – Toggle component outline

Toggles a graphic outline of the component on and off. The symbol is a rectangle with a dot for each lead. Lead 1 is marked with a circle to indicate the component type and angle. The graphic symbol may differ somewhat from the actual component size.

+ and - – Rotate component

Rotates the component in steps of plus or minus 90 degrees.

F4 – Step feeder

Performs a component feeding step. The same function as the *Step* option in the menu, see above.

F5 – Jog feeder

Makes small feeding movements to get a component in the pick position. The same function as the *Jog* option in the menu, see above.

Ctrl+T – Hide text

Toggles between hide and show mode for screen text. Hide mode offers an undisturbed camera view.

7. Tray Magazines

Component trays are used to protect higher pin count packages from electrical and mechanical damage during handling and shipment.

Component trays may be uniformly sized, in compliance with standard JEDEC outlines. Components are usually placed in trays with the device pin number one oriented to a notched corner of the tray.

There are three different types of tray magazines for MYDATA pick and place machines. These types and how to use them are described in this chapter, which also contains information about trays and tray features.

Tray magazine types

The tray magazine types are:

- Y-Wagon Magazine, YWM.

  Component trays are placed on the standard assembly table.
- Tray Wagon Magazine, TWM.

  Component trays are placed on a Tray Wagon Magazine, which has a Y movement of its own.
- TEX Tray Exchanger, TEX.

  A separate tray magazine that is placed in front of a machine.

Trays and tray features

This chapter contains descriptions of trays and tray features, which includes:

- Tray types.
- Tray positions.
- Creating trays.
- Refilling trays.
- Orienting matrix trays.
- Advanced tray features.
- Tray reference guide.

Y-Wagon Magazine, YWM

A Y-Wagon Magazine is arranged by placing a component tray on the assembly table. So, the magazine is not a separate unit but consists of this arrangement and a function in TPSys that handles this type of magazine.

A tray in a Y-Wagon Magazine must be placed on a support, which should have a height of 20–30 mm. There are MYDATA tray supports for this purpose. The tray must be fixed horizontally. Vertically, the weight of the tray is enough to keep it in place.

The Y-Wagon Magazine is called YWM in TPSys.

Tray Wagon Magazine, TWM

A Tray Wagon Magazine is a unit that is put in the machine and on which component trays are placed. A Tray Wagon Magazine is shown in Figure 7-1.

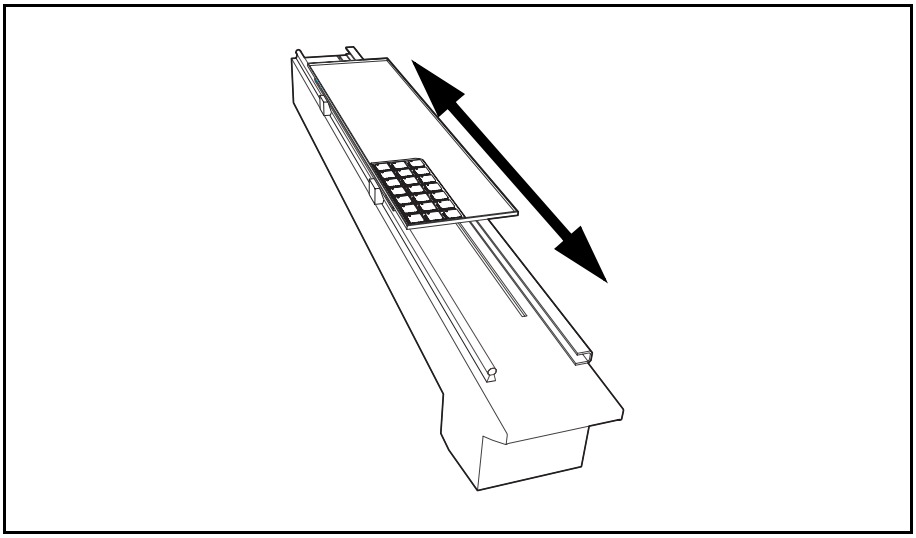

Figure 7-1. Tray Wagon Magazine.

A Tray Wagon Magazine can be used in all types of MYDATA placement machines. It is inserted in a magazine position and it has a Y movement of its own.

When this magazine is used, it is important that the trays on top of the magazine are locked in position. There are magnetic strips for this purpose, see Figure 7-2.

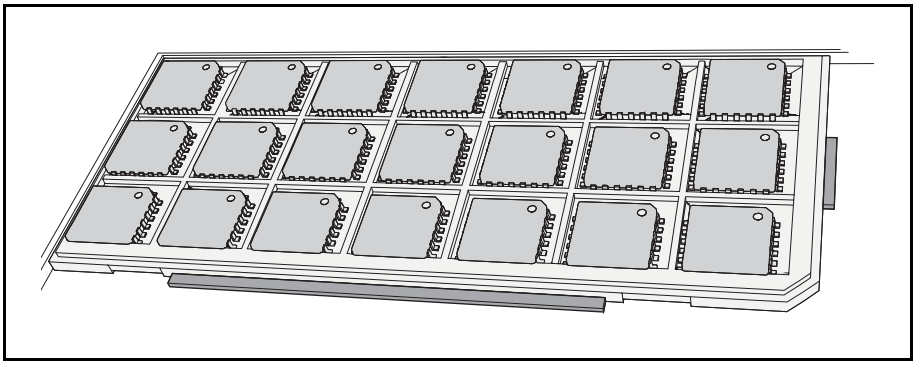

Figure 7-2. A tray locked in position with magnetic strips.

Magnetic strips must not be higher than the tray they lock in position.

Tray Wagon Magazines are called TWM in TPSys.

TEX Tray Exchanger, TEX

This section describes the TEX Tray Exchanger and how to operate it.

Instructions on how to reinstall, remove, move a TEX to another machine, and maintain a TEX are found in the *TEX Tray Exchanger, Service Manual*, MYDATA part number P-024-0162-EN.

A TEX Tray Exchanger is a separate tray magazine that is placed in front of a machine, see Figure 7-3.

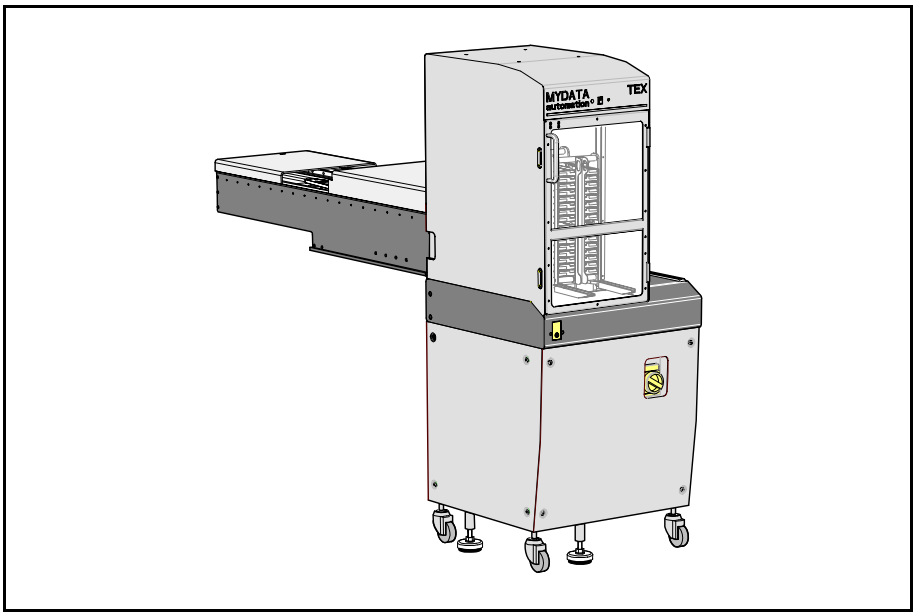

Figure 7-3. TEX Tray Exchanger.

The following characteristics are typical for a TEX Tray Exchanger:

- A TEX Tray Exchanger handles a large variety of tray components. Up to 32 JEDEC trays can be loaded in two parallel and separately controlled tray tracks.
- As soon as a cassette is inserted in the TEX unit and it is activated, a barcode scanner automatically scans the contents of the cassette.
- To handle large trays, a cassette with double width is available.

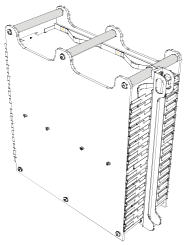

TEX Tray Exchanger units are called TEX in TPSys.

Main Parts

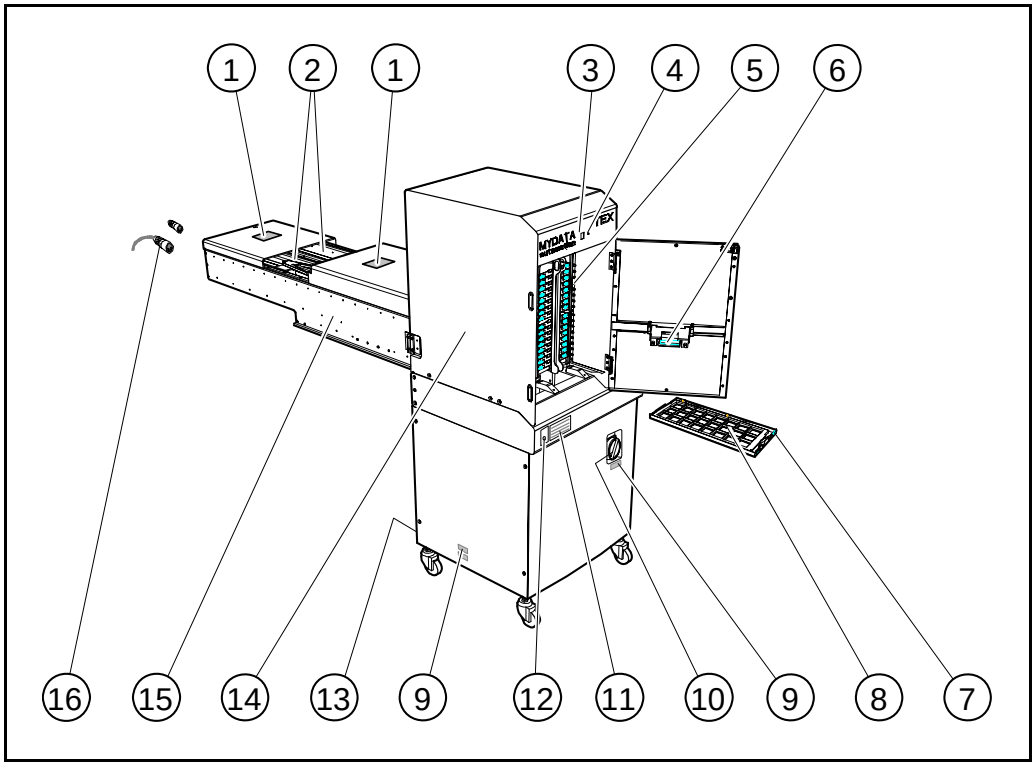

Figure 7-4. TEX Tray Exchanger main parts.

Key

1. Rear and front safety hoods with warning signs (see the safety chapter).
2. Tray tracks.
3. Release button (page 7-6).
4. Power indicator (page 7-6).
5. TEX pallet LEDs (page 7-6).
6. Barcode scanner.
7. Pallet
8. Component tray (also called matrix tray).
9. Warning signs (see the safety chapter).
10. Main power switch.
11. Laser certification sign (see the safety chapter).
12. Ground jack for wrist strap.
13. Mains power inlet.
14. Mother unit.
15. Shuttle unit.
16. Emergency stop cable and termination plug.

Release Button and Indication LEDs

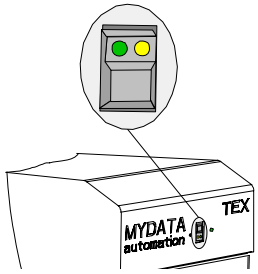

There is a release button with two status LEDs on the TEX unit, see the figure. The status LEDs are green and yellow.

Pressing the release button when the green LED is off and the door is closed will make the TEX initiate and start a pallet barcode scanning. The TEX unit is then active and reports present pallets to the system, and turns on the green status LED.

Pressing the release button when the green LED, or both the green and yellow LEDs, are on will move the cassettes to their home positions, turn the LEDs off, deactivate the TEX, and allow opening the TEX door.

CAUTION! Do not open the door until the LEDs are off and any cassette movement has stopped.

Green and yellow status LEDs

The green and yellow status LEDs indicate the current status as shown in these tables.

Green LED	TEX status
Off	The TEX is not active, the door can be opened.
Blinking	The TEX is initiating.
On	The TEX is active and can be used.

Yellow LED	TEX status
Off	Normal operation.
On	A pick error has occurred. Press the release button, wait until the green LED is off, and open the door to find out the problem.

TEX pallet LEDs

Behind the door there are two columns of yellow LEDs, one LED for each pallet. This LED indicates the pallet status shown in this table.

Yellow LED	Pallet status
Off	Pallet not needed in loaded layout.
Blinking	A pick error has occurred.
On	Pallet needed in loaded layout.

Power indicator

The power indicator on the front indicates the power status. Power on is indicated with LED on, power off with LED off.

Starting the TEX Tray Exchanger

Read the safety chapter before starting the TEX Tray Exchanger.

The TEX Tray Exchanger is started as follows:

1. Switch the main power on (’1’ in Figure 7-5).

   The power indicator (2) is lit.

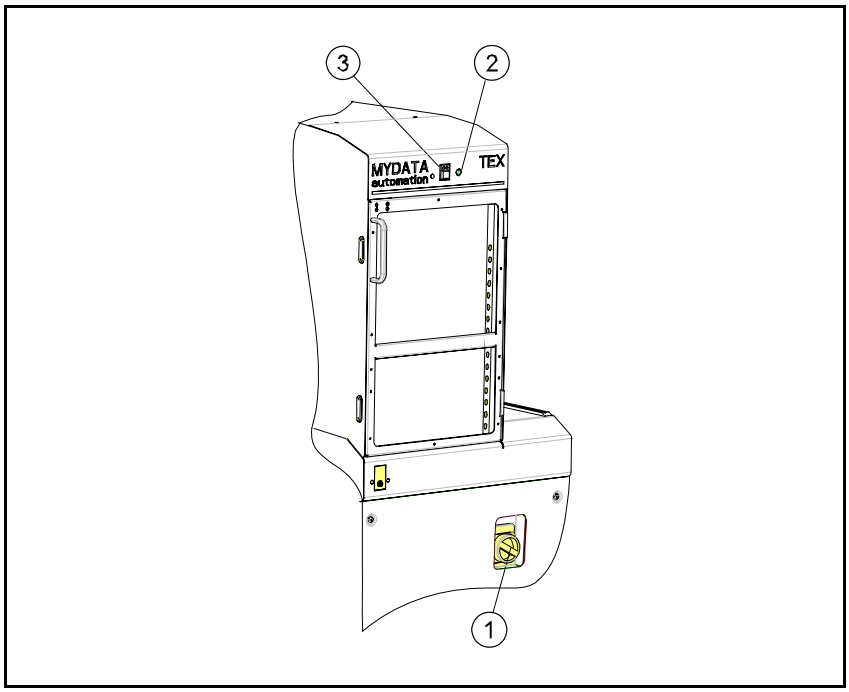

Figure 7-5. Starting the TEX Tray Exchanger.

2. Wait approximately 30 seconds.

   TPSys will load the TEX software. This is reported in the *Messages* window, ending with a message that the TEX Tray Exchanger is deactivated.

3. Make sure the door is closed.

4. Press the release button (3) to initiate the TEX Tray Exchanger hardware.

5. Press the release button again.

   The green LED goes off.

6. Open the door and load cassettes.

7. Close the door and press the release button.

8. Wait for the green LED to show a steady light (it takes approximately 5 seconds to start the barcode scanner, if it has not been used recently).

The TEX Tray Exchanger is ready for use as soon as the TPSys message box has reported the number of pallets found in the TEX unit.

Loading Trays

To keep components in correct positions on the trays, always handle cassettes and trays carefully.

Be careful not to damage the barcode labels when handling pallets.

A cassette with components is heavy to handle and must not be tilted. Note that inserted pallets are kept in position in a cassette with only a magnet in a hinged lever at the front.

Load the TEX Tray Exchanger as follows:

1. Press the release button.
2. Wait for the cassettes to move to their home positions and the green LED to go off.
3. Open the door.

   You can choose to either remove a cassette from the TEX unit for loading it, or keep it in the TEX unit when loading it.
4. If you choose to remove a cassette from the TEX unit, take it out by first lifting it a few millimeters and then sliding it out on the bottom rails.

   Lift in the center handle.
5. Fold out the hinged lever.
6. Pull the pallets out to refill or replace the trays.
7. Place the pallet on a stable surface.
8. Insert a loaded component tray by pressing the short end spring of the pallet with a finger and carefully sliding the tray towards the two springs at the long side of the pallet, see Figure 7-6.

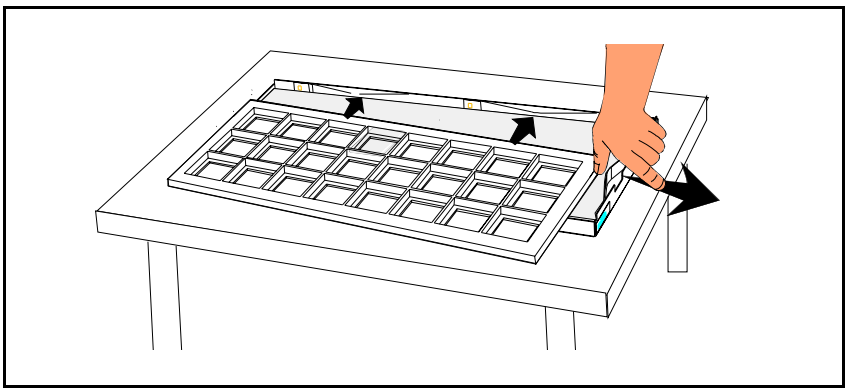

Figure 7-6. Inserting a tray in a pallet.

The pallet springs are designed for JEDEC trays. For smaller trays, use magnetic strips to lock them in position.

There is a Narrow JEDEC tray type for which a special Narrow JEDEC TEX Pallet is available (described on page 7-10).

9. Make sure all components are in their correct positions on the tray.
10. Insert loaded pallets in the cassette, see Figure 7-7. Do not push the pallets all the way in.

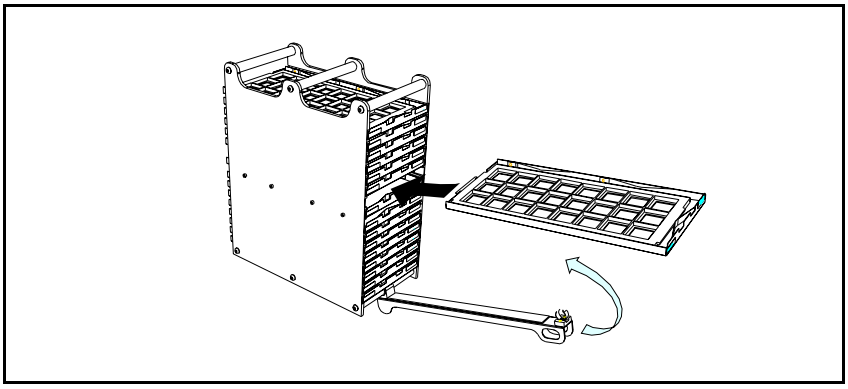

Figure 7-7. Loading a pallet into a cassette.

11. Fold the hinged lever up and let it push the pallets to their final positions.
12. Secure the lever by gently lock the top clamp.
13. If the cassette is removed from the TEX unit, lift the cassette in the center handle, see Figure 7-8, and carefully insert it.

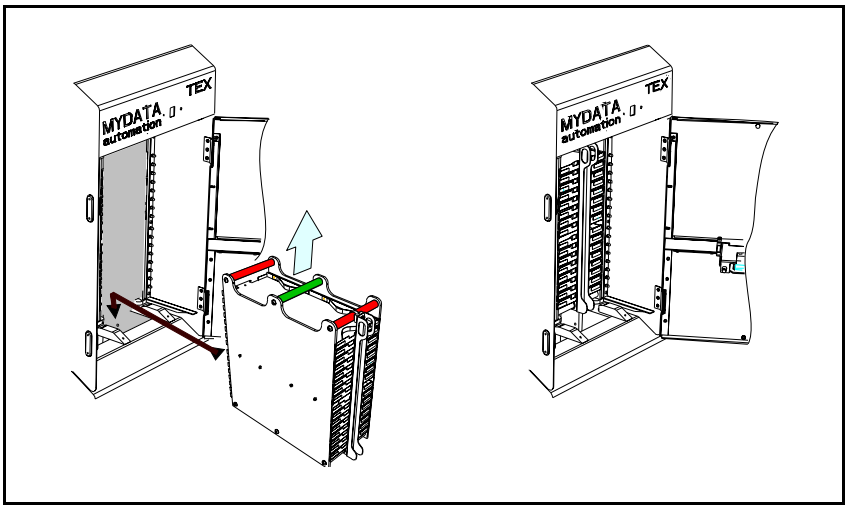

Figure 7-8. Inserting a cassette into a TEX unit.

14. Make sure the cassette is fully seated into the bottom groves.
15. Make sure no pallet has been pushed too far in. The short end of all pallets must rest against the hinged lever.
16. Close the door.

17. Press the release button.

    The green LED will show a steady light.
18. Update the component data in the *TEX Trays* window (described on page 7-41).

The TEX unit is now ready for use.

Narrow JEDEC TEX Pallet

A special pallet called Narrow JEDEC TEX Pallet is available for thin (8 mm or less) Narrow JEDEC trays and thin trays of, for instance, 'Waffle pack' type.

This pallet is required for picking components with the HYDRA unit from Narrow JEDEC trays.

Component trays are also called matrix trays.

When loading this pallet, the component tray can be inserted in one way only, see Figure 7-9. The pallet is loaded by just lowering the tray into the pallet.

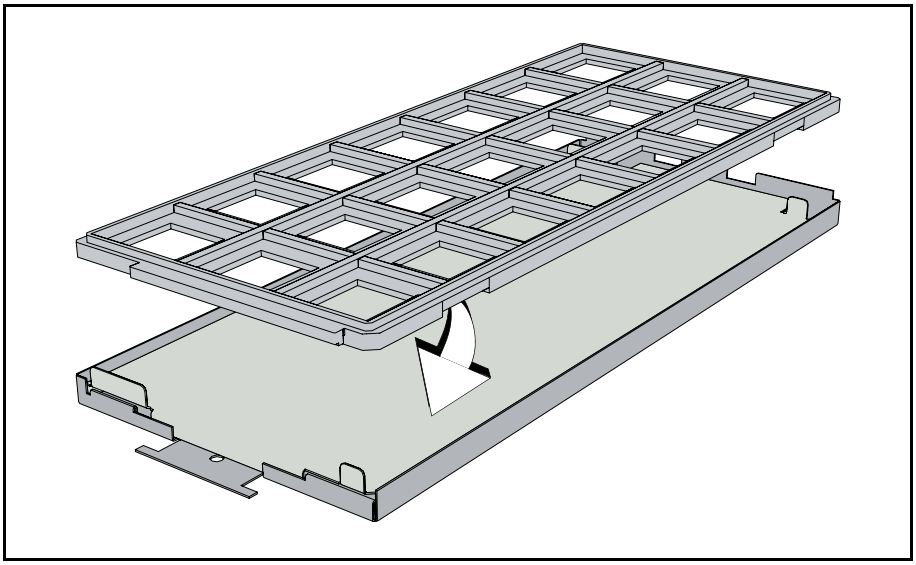

Figure 7-9. Loading a Narrow JEDEC TEX Pallet.

Troubleshooting

Problem	Remedy	TPSys message
No response from TEX.	Make sure the main power switch is on.	*Magazine [***] removed from slot [***]*
	Press the release button and wait until the green LED shows a steady light.	*TEX [***]/[***] deactivated*
	1. Make sure the door is closed. 2. Make sure both the shuttle safety hoods are in place. 3. Make sure main emergency stop buttons are released.	*Emergency stop button activated.*
	1. Deactivate the TEX with the release button. 2. Wait for the green LED to go off. 3. Activate the TEX with the release button.	
	1. Deactivate the TEX with the release button. 2. Switch the TEX main power off. 3. Wait until TPSys reports TEX deactivated and removed. 4. Switch the main power on again. 5. Wait until TPSys reports TEX deactivated. 6. Remove any cassette left in the TEX unit. 7. Activate the TEX with the release button. 8. Wait until the green LED shows a steady light.	
	Ensure that the emergency stop cable and termination plug is connected.	*Emergency stop button activated.*
TEX does not initiate.	Make sure no pallet is left in the shuttle unit. If so: – Switch the TEX off. – Remove the transparent plastic safety hood (front). – Remove the pallet. – Remove any cassettes left in the TEX. – Fit the safety hood and restart.	*TZ path safety sensor activated.*
Components are not picked correctly.	Vibrations may have moved components out of their positions on the tray. Try the following: Check if there are any components out of positions. Check each pallet after it has been transported on the shuttle unit. Indicates if there is a problem in the TEX unit that should be carried out by trained service personnel.	

The [***] string is a substitute for a name or number.

Trays in TPSys

Components loaded on trays must be available to TPSys before they can be picked and placed. For this purpose TPSys needs information about where a tray is located, its orientation, component type, quantity, and other parameters. This tray and component data have to be entered into TPSys.

Entering such data into TPSys is called creating a ’tray’.

Some tray type and tray position information should, however, be entered before trays are created.

Creating a tray in TPSys is described in the following sections:

- Creating a tray type and a tray position, page 7-13.
- Creating a tray, page 7-22.

To avoid misunderstanding in the following descriptions, some terms used in TPSys and in the descriptions are explained below.

Terms used in TPSys and in the following descriptions

JEDEC

A set of matrix tray standards.

Matrix tray

A physical tray used as packaging for components, typically made of ESD-safe plastic.

Position

The position of a matrix tray. The position coordinates can be updated by using the X-wagon camera. A position can also be linked to a tray position.

TEX pallet

A pallet in the TEX Tray Exchanger on which matrix trays are placed.

Tray

A logical tray in TPSys to which all needed matrix tray and component property information is associated. Examples of associated information is tray position and orientation, and component type and orientation.

Tray magazine

A common term for the following three optional tray magazine types available for the MY100 machine:

- TEX Tray Exchanger.
- Tray Wagon Magazine.
- Y-Wagon Magazine.

Tray position

Pre-defined part of the base on which a matrix tray is placed. Usually a corner of a TEX pallet or a corner of a tray wagon magazine table.

Tray type

An actual matrix tray appearance. What it looks like.

Creating Tray Type and Tray Position

This section describes how to create a tray type and a tray position. Normally, the same tray types and tray positions are used for a number of trays.

Consequently, when trays are created, the tray type and tray position are selected rather than being created. Therefore, they are described separately in this section.

Before Creating a Tray Type

To be able to create a new tray type, the following is needed:

- A matrix tray of the type you want to create. Preferably with components in lower left and upper right positions, see Figure 7-10.

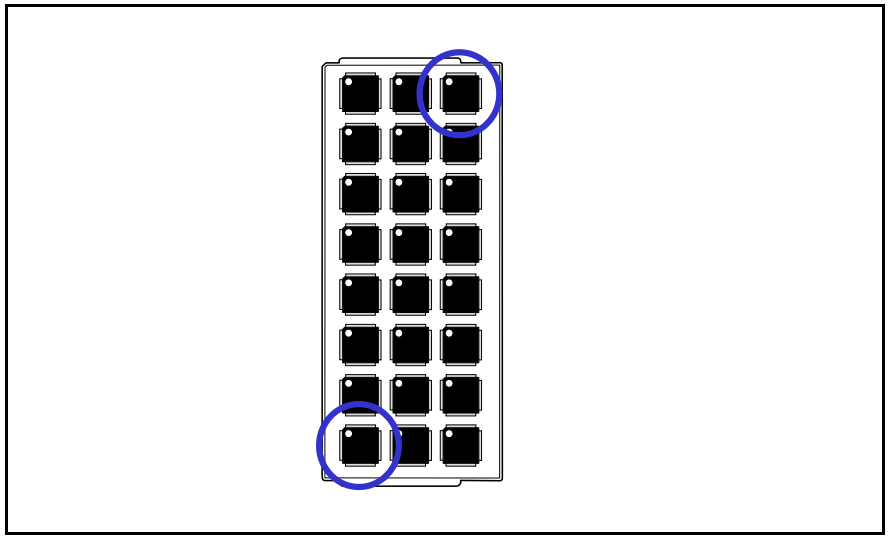

Figure 7-10. Matrix tray with the lower left and upper right component positions marked.

- Optionally, a package with a similar shape as the component in the matrix tray programmed in TPSys.

  This is necessary if the matrix tray pockets are larger than the camera view.

Preparation

1. Decide the matrix tray orientation in the machine.

   This should be the same orientation as the one used during assembly.

2. Count the number of rows and columns in the matrix tray.

   Hold it oriented the way it will be placed in the machine.

   A row is a line of pockets along the X direction of the machine. A column is a line of pockets along the Y direction. Figure 7-11 illustrates the definition of rows and columns.

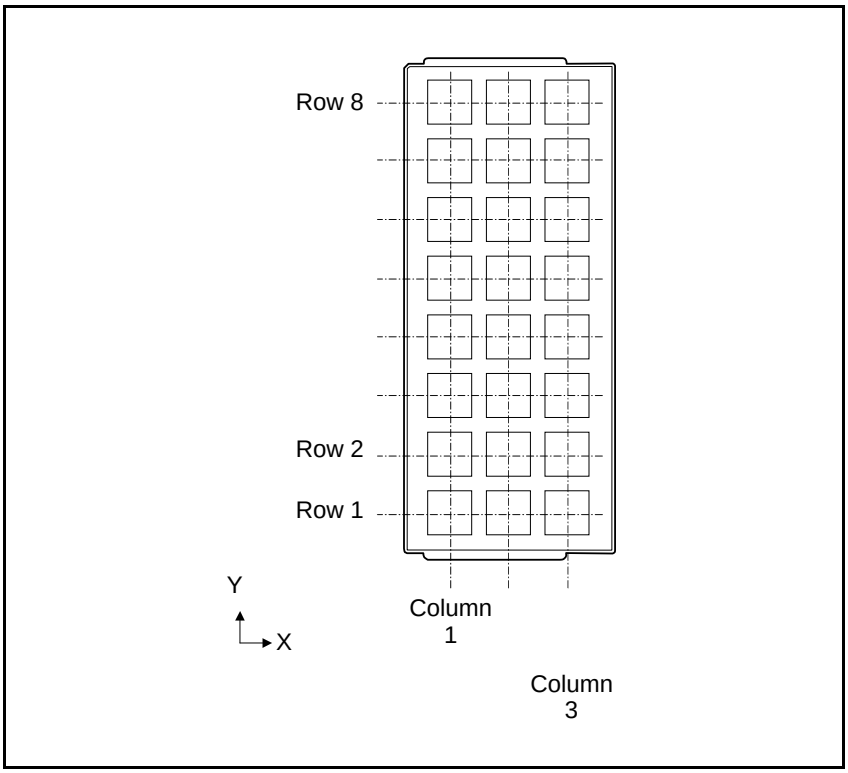

Figure 7-11. Matrix tray rows and columns.

3. Place the matrix tray in the magazine.

Always place the matrix tray oriented as it will be during assembly. This will reduce the risk of incorrect component angle.

Creating a Tray Type

There are a number of pre-defined standard JEDEC tray types available in TPSys at delivery. If none of these can be used, create a new tray type as follows:

1. Select *Magazine* > *Tray Types* in the main menu. The last selected tray type will be selected by default.
2. Press <F13> to insert a new tray type. The tray type will be a copy of the selected tray type.
3. Enter a name and press <Enter>.
4. Enter the number of rows and columns earlier counted in the matrix tray. Type it in the *Number of rows* and *Number of columns* fields.
5. Press <F6> and select the magazine into which the matrix tray is inserted.

   If the matrix tray is inserted in a TEX unit and it is not shown in the dialog box, check if the TEX Tray Exchanger is inserted and initiated.

Large tray pockets

Tray pockets can be larger than the camera view. In this case, you can use a component as a reference as follows:

1. Enter the package name in the *Typical package* field.

   If you press <Tab> in this field, the *Packages* window is opened in which you can select a package. It does not have to be the correct package, the important thing is that the lead pattern is similar.

   The TPSys web interface can be used to find a suitable package.

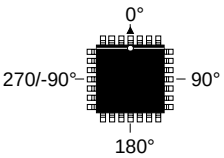

2. Press <F7> and enter the package angle of the components in the matrix tray relative to the machine coordinates.

   Usually, the angle can be referenced to the notched corner found on most matrix trays. Some package angles are shown in Figure 7-12.

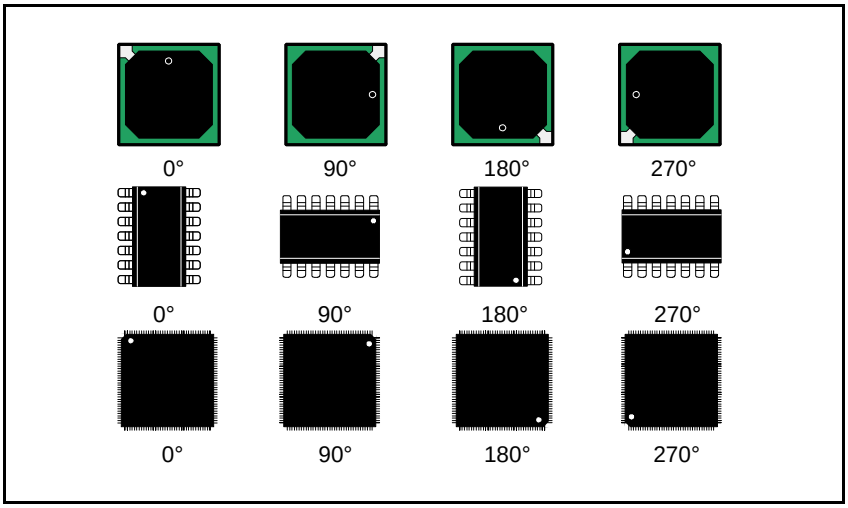

Figure 7-12. Package angles.

Editing Tray Type Geometry

The geometry of a matrix tray, that is the actual physical outlines, must be defined in TPSys. This is done as follows:

1. Select the *Width/length* field and press <F1>.
2. Locate three tray corners by following the instructions on the screen.

   If the matrix tray is placed on a TEX pallet, you will be prompted to select a TEX pallet.

   You can use any feature on the matrix tray as corner. If you intend to use the tray position feature for this tray type, you must use outer corners. In Figure 7-13, suitable outer corners for tray position usage are marked ’1’, ’2’ and ’3’.

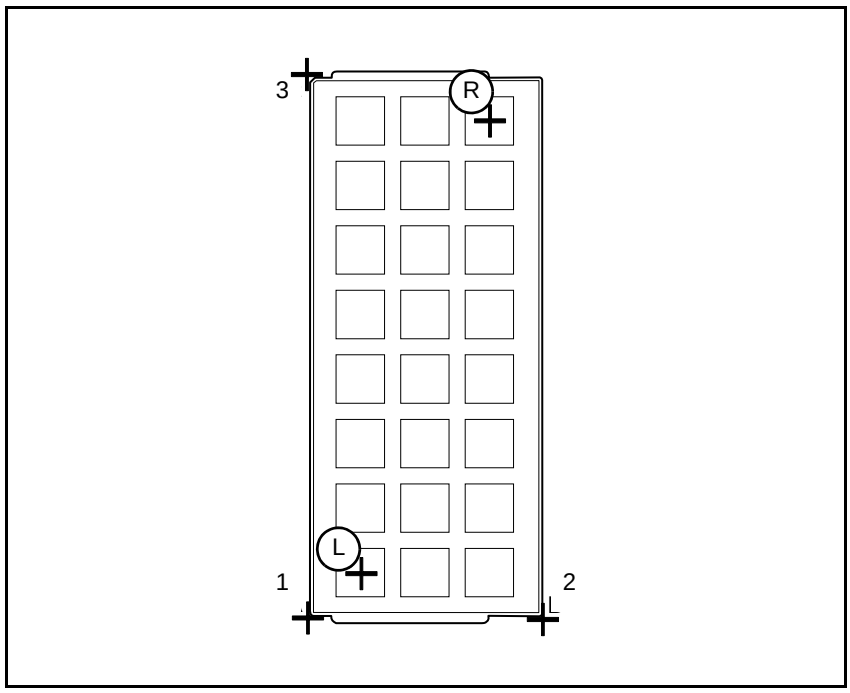

Figure 7-13. Matrix tray corners and component positions.

3. Select *Lower left component position* and press <F1>.
4. Locate the lower left component (’L’ in Figure 7-13) by following the instructions on the screen.

   If the tray pockets are larger than the camera view, see page 7-17.
5. Press <Enter> to save.
6. Select the *Column step/row step* field and press <F1>.
7. Locate the upper right component (’R’ in Figure 7-13) by following the instructions on the screen.
8. Press <Enter> to save.

   TPSys will now calculate the tray steps from the information entered (number of rows, columns, and the distance between the located components).

Or, press <Esc> and select *Yes* in the dialog box.

9. Save the tray type by repeatedly pressing <Enter> until the *Tray Types* window is opened.

10. Complete fields for optional features, if to be used.

    Complete the appropriate fields if fiducial marks or pre-pick inspection is to be used. For more information about these features, see the description of the *Tray Types* window on page 7-38.

Tray pockets larger than the camera view

If tray pockets are larger than the camera view, you can locate the component positions as follows:

1. Press <Ctrl> +<F3> to open a partial graphic outline of the package selected in the *Typical package* field.

   The outline consists of a rectangle with cross hairs and a dot for each lead. Lead 1 in the package definition is marked with a circle. By default, the outline cross hairs are at the center of the component.

2. Press <F2> to move the cross hairs to a lead outline.

   It is the *Lead toggling* field for the package that controls which leads the cross hairs will move to. Typically, this field contains one lead for each side of the package. Figure 7-14 shows an example of a component with four reference leads.

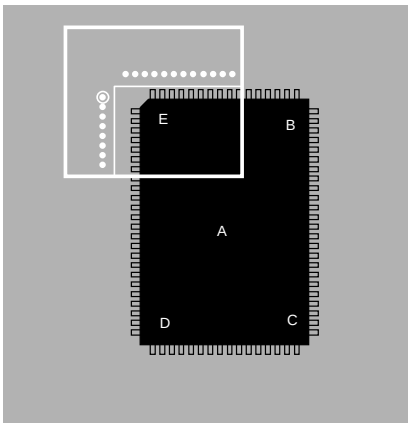

Figure 7-14. A component with four reference leads.

3. Use the trackball to align the outline cross hairs.

4. Repeat pressing <F2> and aligning the outline cross hairs until the outline is back to the component center.

   The cross hair position (*Current lead*) is shown at the top left of the window.

The real component might be shown smaller than the outline. If so, you need to repeat toggling <F2> several times. And, you cannot align every outline lead with the corresponding component lead. The important thing is to center the outline on the component.

The Tray Position Feature

The tray position feature is an optional way to use pre-defined positions. The alternative is to locate the matrix tray every time the position is changed by using the camera.

Using the tray position feature will enable you to re-use pre-defined positions over and over again, which saves changeover time.

Creating a Tray Position

To create a tray position, do as follows:

1. Place a matrix tray in a tray magazine.

Place it in the position and orientation that will be used during assembly. Select a position that can easily be re-used, such as a corner.

2. Open a tray position window in one of the following ways, depending on the magazine type:

– Select *Magazine* > *TEX Magazine* > *Tray Positions* in the main menu.

– Select *Magazine* > *Tray Wagon Magazine* > *Tray Positions* in the main menu.

– elect *Magazine* > *Y-Wagon Magazine* > *Tray Positions* in the main.

The window contains a list with names of existing tray positions. The sorting order can be changed by pressing <Space> (not applicable to TEX tray positions).

3. Press <F13> to insert a new tray position.

4. Enter a name for the tray position.

5. Optionally, enter a unique string that can be used as a barcode identifier for the tray. This step is important if you are using MYLabel or TPSys barcode scanners when loading trays.

Keep the barcode string short, for instance ’J1’. Otherwise, the generated barcode that corresponds to this tray position may be very long.

---

6. Select the *Type* field and press <Space>.

7. Select type of corner.

The following options can be selected:

Lower left
Upper left
Upper right
Lower right

Figure 7-15 illustrates these options.

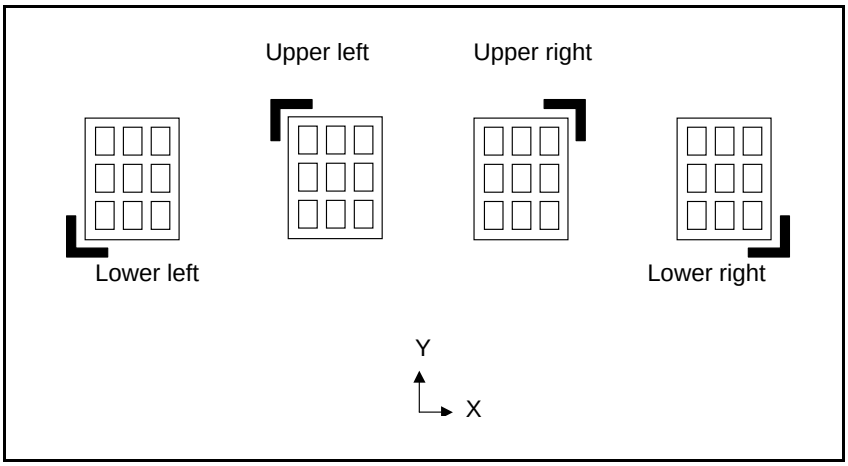

Figure 7-15. The four tray position types.

Recommendations for these options:

– TEX Tray Exchanger.

Upper left is recommended for narrow TEX pallets, see Figure 7-16. Matrix trays are pushed to the upper left corner by the TEX pallet spring.

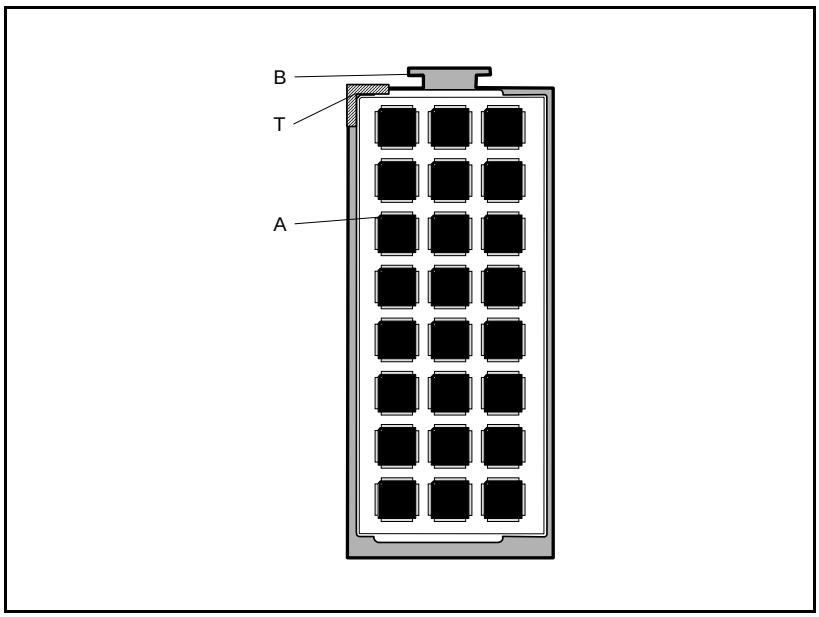

Figure 7-16. A matrix tray (A) on a narrow TEX pallet.

– Tray Wagon Magazine.

Recommended option depends on in which corner the matrix tray will be placed. Figure 7-17 shows two examples.

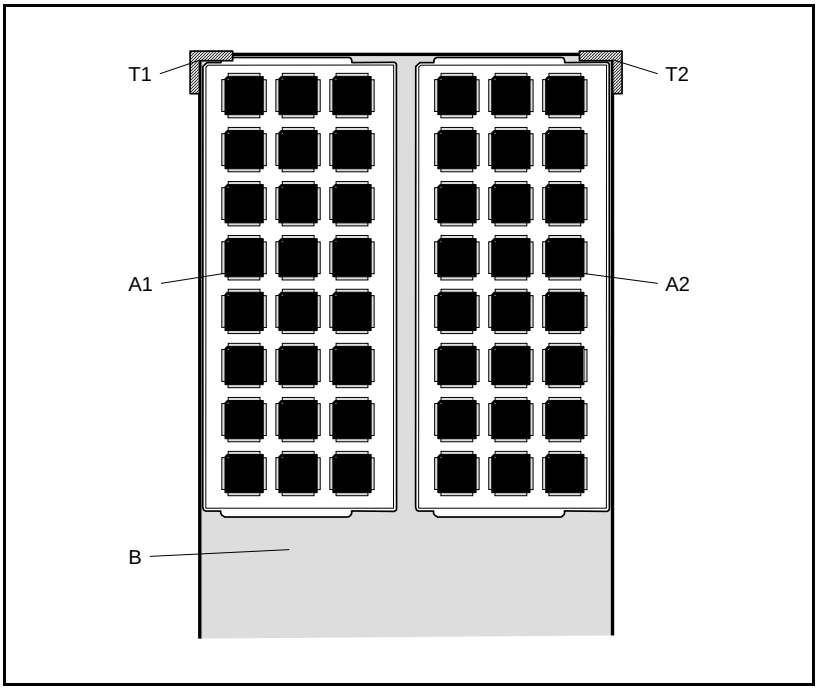

Figure 7-17. Matrix trays in a Tray Wagon magazine.

Upper left (T1) is recommended for matrix tray A1 in the figure.

Upper right (T2) is recommended for matrix tray A2 in the figure.

8. Select *Corner at* and press <F1>.

9. Center the cross hairs on the selected matrix tray corner, see Figure 7-18.

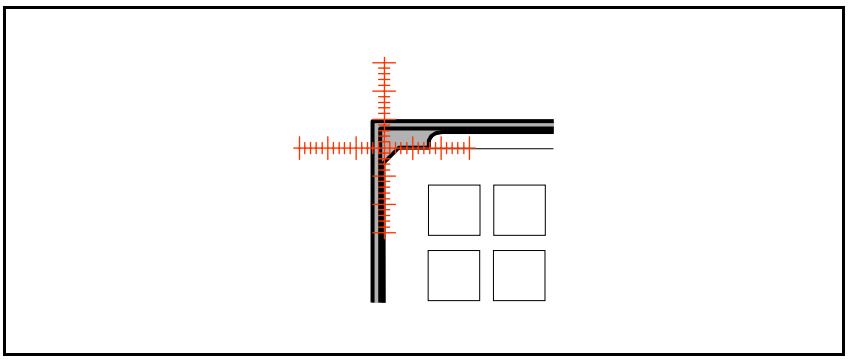

Figure 7-18. The cross hairs on the matrix tray corner.

10. Press <Enter> twice to confirm and save the tray position.

Tray positions for different matrix tray outlines

Matrix trays can be either plain rectangular or have features such as the tabs on JEDEC trays. Therefore, corners may, or may not, coincide with a corner of a tray magazine.

Depending on such geometry differences, several tray positions may be needed for the same corner.

Figure 7-19 shows an example where a Tray Wagon Magazine (B) with a matrix tray (A3) requiring a tray position (T3) and a matrix tray (A4) requiring a different tray position (T4).

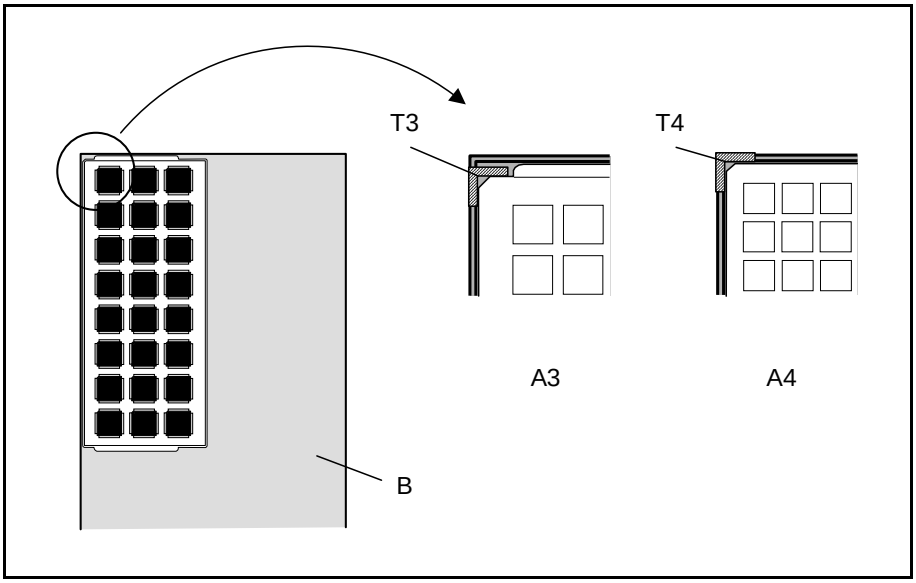

Figure 7-19. Different matrix tray outlines and tray positions.

Creating a Tray

To create a tray means to enter matrix tray and component data into TPSys. This is applicable to the following data:

- Tray type, containing matrix tray geometry.
- Component name and component angle.
- Quantity and batch ID for the matrix tray.
- Position for the matrix tray.
- Information whether HYDRA is able to pick from the tray or not.

The MYLabel software automates the insertion, editing, and location of TPSys trays. If MYLabel is used for loading and unloading trays, skip this section.

Inserting a New Tray

To insert a new tray means adding a tray entry in one of the trays windows.

1. Place the matrix tray in a tray magazine (TEX Tray Exchanger, Tray Wagon Magazine, or Y-Wagon Magazine).

Or, press <F10> and select magazine from the menu.

2. Open a tray window in one of the following ways, depending on the magazine type:
   - Select *Magazine* > *TEX Magazine* > *Trays* in the main menu.
   - Select *Magazine* > *Tray Wagon Magazine* > *Trays* in the main menu.
   - Select *Magazine* > *Y-Wagon Magazine* > *Trays* in the main menu.

   The last selected tray will be selected in the window.
3. Press <F13>.

   A new tray is created that is a copy of the selected tray.
4. Select component name.

   You can type the name or press <Tab> and select from the list in the *Components* window.
5. Enter a tray name.

   The default tray name is the component name followed by a serial number.
6. Optionally, enter the component batch information.
7. Select tray type.

   Type the name or press <Tab> and select from the list in the *Tray Types* window. If a desired tray type is not included in the *Tray Types* window, you can add it.

Editing the Tray

After inserting the tray, the remaining data fields are completed as follows:

1. Press <Enter> to edit the tray information.
2. Select the *Component angle* field and enter the angle related to the tray type.

   Note that it should be the angle related to the tray type, not to the machine coordinates. Figure 7-20 shows some component angles.

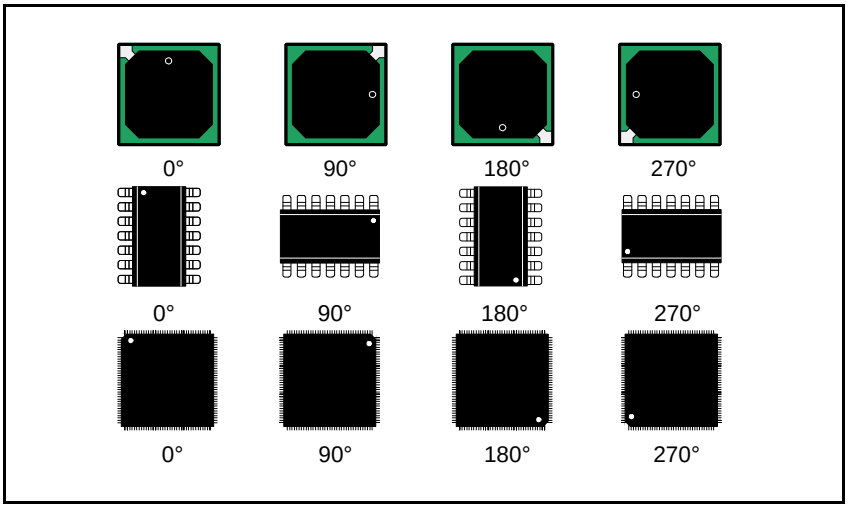

Figure 7-20. Component angles.

3. Select the *Quantity* field and enter the quantity.

   TPSys will default this value to a full tray. Figure 7-21 shows a matrix tray with no components and a tray with 10 components. A full matrix tray of this type contains 24 components.

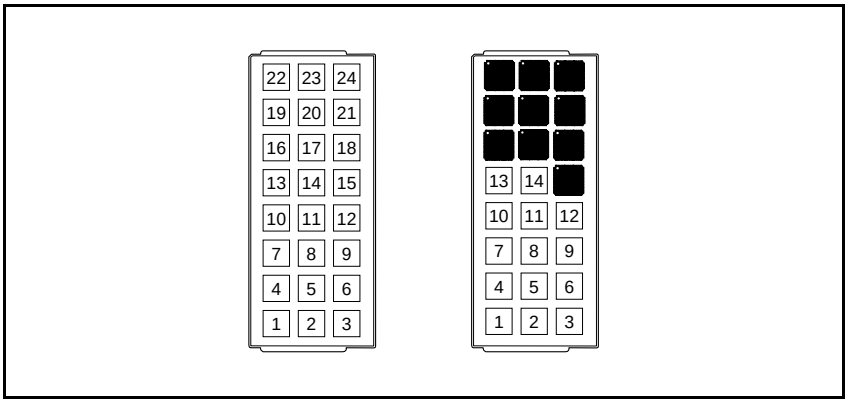

Figure 7-21. Empty and partly filled matrix tray.

4. Set the *Auto refill* field to *Yes*.
5. Select the *TEX pallet* field and press <Tab> to select TEX pallet if the matrix tray is placed in a TEX Tray Exchanger.

Locating the Tray

TPSys needs to know the tray location to be able to pick from it. A tray can be either linked to a pre-defined tray position or be located by using the camera.

Locating a tray by using a tray position

The following requirements have to be met when using a tray position:

- The matrix tray must be parallel to the machine X and Y directions. It cannot be placed in an arbitrary angle.
- A suitable tray position must be found in the *TEX Tray Positions* window, the *TWM Tray Positions* window, or the *YWM Tray Positions* window.

Associate a matrix tray to a pre-defined tray position as follows:

1. Select tray position in the *Position* field of the *Data* box.

Press <Tab>, select tray position, and press <Enter>.

Only one tray can be linked to a specific tray position, as the trays otherwise should be put on top of each other in the magazine. If you try to link another tray, the system will ask if you want to remove the other tray.

2. Select *Orientation* and define the rotation of the tray.

There are four options. If the tray is placed in the same orientation as the tray type, select *Same as tray type*, which is the default setting.

Figure 7-22 shows the four options. TPSys expects the tray to be placed in one of these orientations, not in an arbitrary angle.

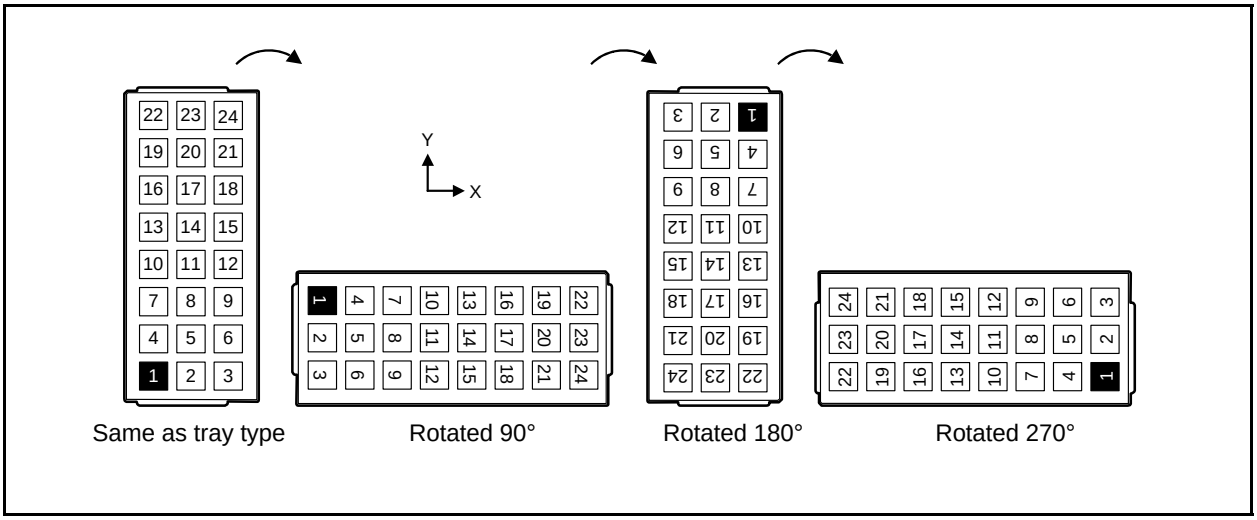

Figure 7-22. The four orientation options.

3. Press <Enter> to save.

If you want a tray to be oriented in a different angle, you cannot use a pre-defined tray position but locate the matrix tray by using the camera.

Locating manually

Manual location is used when there is no suitable pre-defined tray position. Either, there is no defined tray position, or the tray angle is not parallel to the machine X and Y directions.

Locate a tray manually by using the camera as follows:

1. Select the tray in the list, or, select the *Position* field in the *Data* box.
2. Press <F1>.
3. Select either *First and last component position* or *Tray corners*.

   First and last component position gives you a chance to verify that the orientation of the outline matches the component orientation in the trays.

   See the next step for either of these options below.

First and last component position

4. Center the cross hairs on the first component.

   Use the trackball to move the cross hairs. If the component is larger than the camera field, toggle between the leads by pressing <F2> or <F3>.

   If a matrix tray is placed in an orientation that differs from the orientation specified in the tray type, the component outline may be incorrectly rotated. Press the + or – key to rotate the component outline until it best matches the physical component.
5. Press <Enter> and center the cross hairs on the last component position.
6. Press <Enter> to save the location.

Locating a tray can result in a distance between the first and last component that differs from the one specified in the tray types window. If there is a substantial difference, a warning message will be shown. A possible reason may be that the wrong pockets are used during the tray location, or the tray type creation.

Tray corners

4. Center the cross hairs on the tray corner at the first component. Use the trackball to move the cross hairs.
5. Press <Enter>.
6. Center the cross hairs on the tray corner at the last component.
7. Press <Enter> to save the location.

Trays can also be located by using fiducial marks, provided that the tray type linked to the tray has the *Existing fiducial marks* field set to *Yes*. This is further described on page 7-38.

HYDRA Mountable Components on Trays

Some components in trays can be mounted with the HYDRA mount head. To test this, press <F4> after a tray is located to see if the HYDRA mount tools can reach down to the components. If you do not perform this test, the machine will use the single mount head even if the components are HYDRA mountable.

For reference information about TPSys trays, see page 7-41.

Removing and Deleting Trays

Removing a tray means to clear the location information for the tray. To remove a tray, select the tray in the list and press <F7>. The tray will remain in the list but the *Position* field for the tray will be blank. The tray has to be located again to be usable, see page 7-24.

Press <F8> to remove all trays in the list.

To permanently delete a tray from the list, press <Del>.

Refilling Trays

When all components on a tray are picked, the tray has to be replaced. There are two options for this:

- Automatic refill.
- Manual refill.

Automatic Refill

When a tray is created, there is an *Auto refill* option that can be set to *Yes*. This setting ensures that a dialog box is shown as soon as the tray runs empty.

Do as follows to refill a tray when the *Auto refill* option is enabled:

1. Remove the empty matrix tray and replace it with a new one in the same position.
2. Select one of the following options in the dialog box:
   - *Yes*

     Updates the quantity to a full matrix tray. If the new matrix tray has been moved more than a millimeter from the position of the previous tray, locate the tray again, see page 7-24.
   - *Remove tray*

     Selecting this option does not update the quantity. The system marks the tray as not located. This option is used if you do not intend to mount further components from this tray.
   - *No*

     Selecting this option does not update the quantity. The tray is kept located but marked as not available for picking.

The *Auto refill* feature can only update the quantity to full tray with the same batch number as the previous tray. If you need to refill with a less number of components, or change the batch number, use manual refill.

The trays window is described on page 7-41.

Manual Refill

Manual refill mode is in force if the *Auto refill* option in the trays window is set to *No*. In this mode you can change the batch number when refilling. You can use load a matrix tray that is not full.

Do as follows to refill a tray when the *Auto refill* option is disabled:

1. Remove the empty matrix tray and replace it with a new one in the same position.
2. Open a tray window in one of the following ways, depending on the magazine type:
   - Select *Magazine* > *TEX Magazine* > *Trays* in the main menu.
   - Select *Magazine* > *Tray Wagon Magazine* > *Trays* in the main menu.
   - Select *Magazine* > *Y-Wagon Magazine* > *Trays* in the main menu.

   Or, press <F10> and select magazine from the menu.
3. Select tray in the list and press <F6>.
4. Update the quantity and batch information in the dialog box.

Orienting Matrix Trays

It is important to understand what orientation and tray positions mean when using trays in TPSys.

Orientation

The *Orientation* field in a trays window defines how a matrix tray is oriented. The following four options can be selected to define the orientation:

Same as tray type

This is the default recommended option. It means that the matrix tray is oriented in the same angle as it was when the tray type was created.

Rotated 90°

Rotated 180°

Rotated 270°

These options mean that the tray is rotated the indicated number of degrees clock-wise from the angle it was oriented in when the tray type was created.

Tray positions

The *Type* field in a tray positions window defines where a tray corner is located. The following four options can be selected to define the type:

Lower left

Upper left

Upper right

Lower right

These options mean that a tray is located to the table corner indicated.

As this is a defined area in a tray magazine, it can only be one tray linked to the same tray position (otherwise, the trays should be put on top of each other in the magazine).

Combinations of these features

The described four orientations can be combined with the four position types. In order not to confuse these concepts, it is important to remember that:

- Orientation defines the angle of a matrix tray.
- Tray position defines in which table or pallet corner the matrix tray is positioned.

All combinations of these concepts are shown in Figure 7-23 to Figure 7-26.

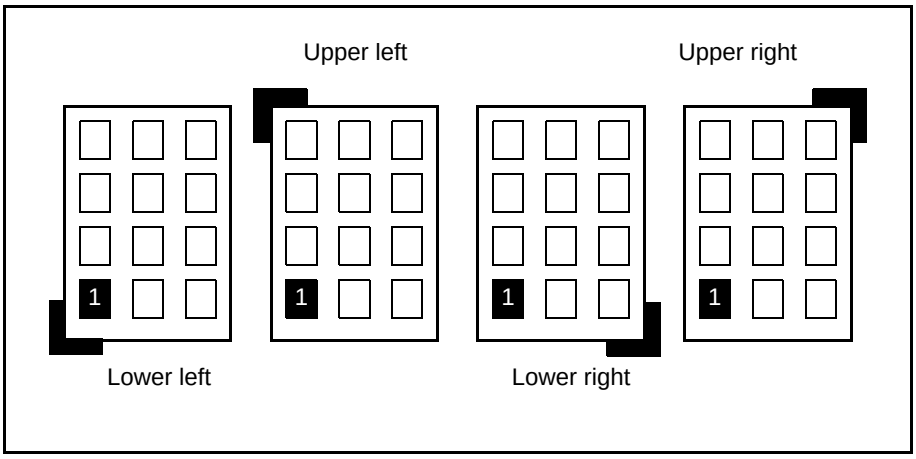

Figure 7-23. Orientation: Same as tray type

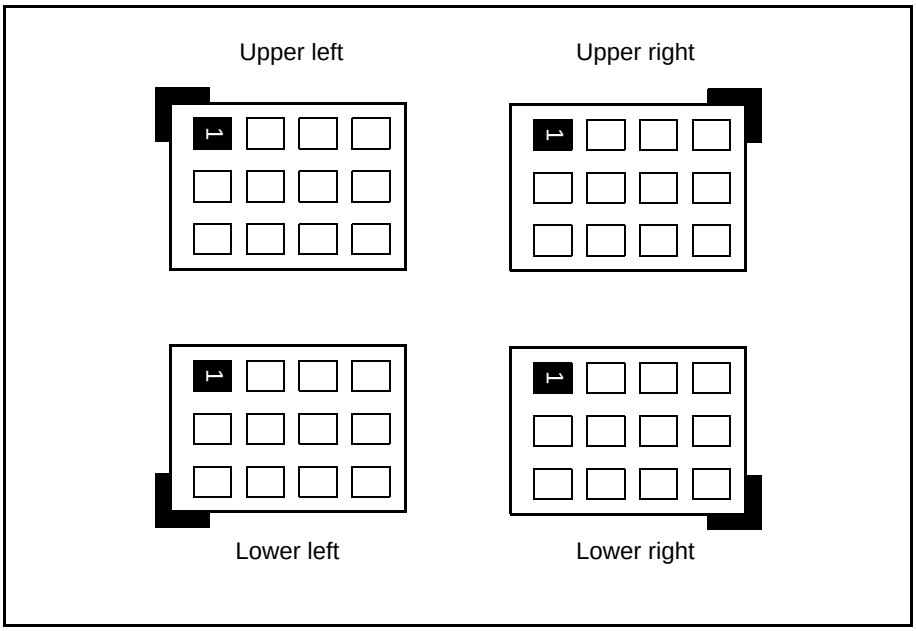

Figure 7-24. Orientation: Rotated 90°

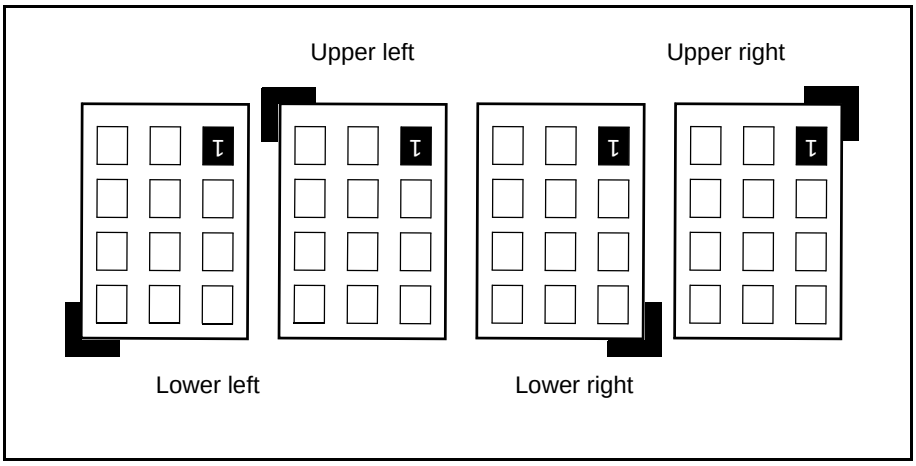

Figure 7-25. Orientation: Rotated 180°

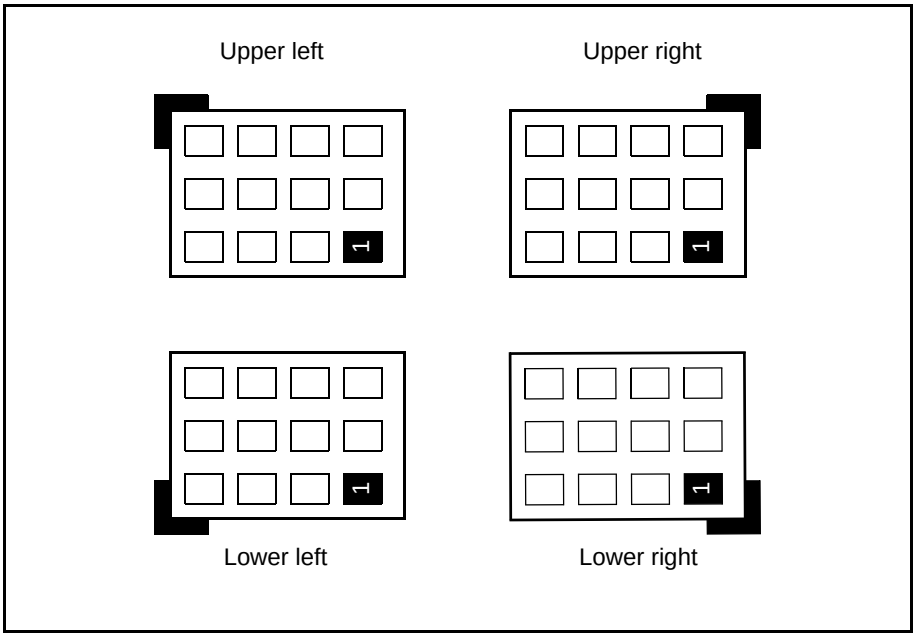

Figure 7-26. Orientation: Rotated 270°

Advanced Tray Features

There are some advanced tray handling features available, which are described in this section.

Tray Handling in Network

This is a feature that is available if the machine is connected to a network and the trays are shared between machines.

Viewing trays and tray positions

The following features are applicable if the system uses shared trays:

- All available trays in the network are shown in the *TEX Trays*, *TWM Trays*, and *YWM Trays* windows.

  Pressing <Space> will toggle the list sort order to be by machines or by tray names.

- All tray positions in the network are shown in the *YWM Tray Positions*, *TWM Tray Positions*, and the *TEX Tray Positions* windows.

  Pressing <Space> will toggle the list sort order to be by machines, by tray names, or to show local tray positions only.

Tray positions always refer to coordinates in the local machine. Although you can see tray positions in other machines, you cannot apply them to a local machine.

Careful Put Back in Trays

Components can be put back in trays either with optimum speed or with a reduced speed. Reduced speed allows the mount tool air pressure to equalize before the tool move up again. Neighboring components are hereby prevented from being moved by tool air pressure. This applies for instance to bare die and flip chips.

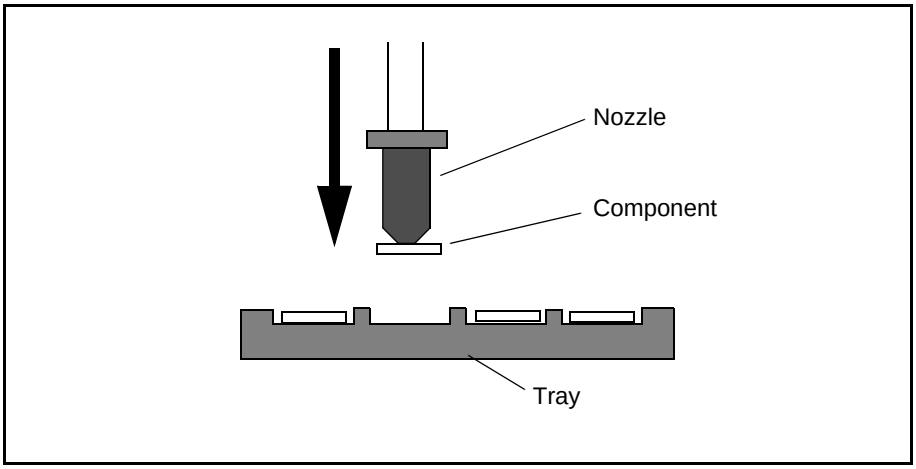

Figure 7-27. Put back waiting time.

The *22.0015 Vacuum Wait Times; Equalize pressure at put back* parameter specifies a time in milliseconds (ms). This time is the waiting time from put back until the mount tool moves up again. Default value is 0 ms. For a very small die, a time of about 500 ms is recommended.

This parameter controls the put back feature in all trays.

Pick Level Tolerance for Trays

Trays may vary in height. A separate parameter that adds an extra tray pick level tolerance to the general pick level tolerance is therefore available.

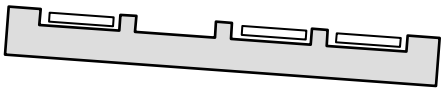

Figure 7-28. Sloping tray.

The *84.0255 Trays; Pick level tolerance* parameter influences the slow part of the pick cycle. The higher the value, the better the machine will be to pick from trays that are uneven or sloping. Note that the machine will run slower if the value is high. Default value is 0 mm.

In general, trays should be oriented as horizontal as possible to ensure good pick reliability.

Pocket Gaps in Matrix Trays

The system will automatically calculate if the HYDRA mount head can pick a tray component. This is estimated from the component size and from tolerances for off-center picking. The margin the system leaves for component's play in the tray pockets is controlled by the *171.0432 Component Gap for Tray Magazine; All packages* parameter. Default value is 0.5 mm.

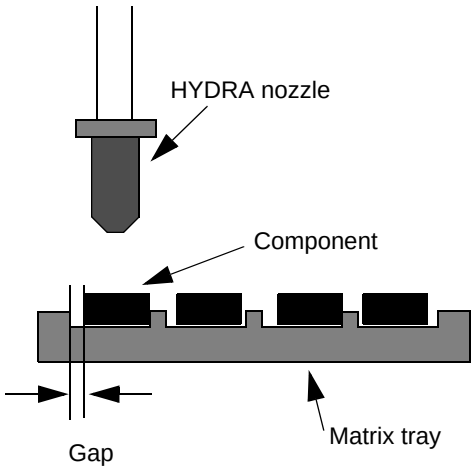

Figure 7-29. Parameter for component gap in matrix trays.

Troubleshooting Pre-Pick Inspection

In the *Tray Types* window you can indicate that you want the system to perform pre-pick inspection. If this inspection is selected, the *Inspect algorithm* field is set to *Auto*, *Detect contrast*, or *Detect edges*. For troubleshooting purposes, it is possible to see X-wagon camera images during pre-pick inspection by setting the *0032 View mode* parameter in the *1002 Assembly switches* parameter group to *Yes*.

If the machine stops after a centering attempt, a composed image will be shown that includes some images for troubleshooting the pre-pick inspection.

Figure 7-30 shows an example where the *Inspect algorithm* field is set to *Detect contrast*. The top image is the one taken by the centering camera. The lower three images are taken by the X-wagon camera.

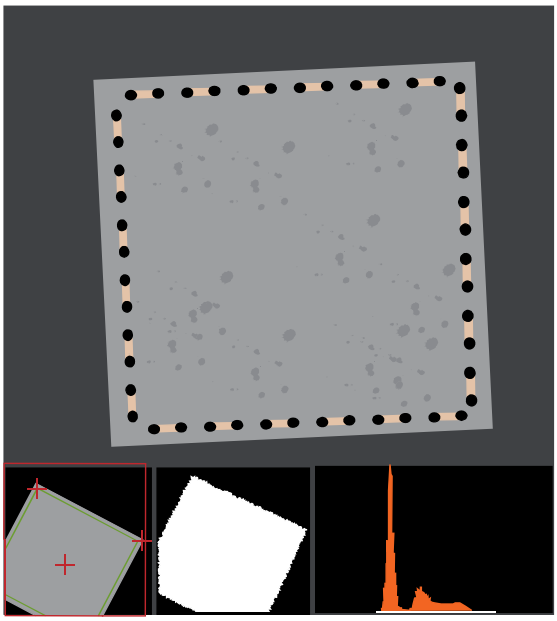

Figure 7-30. Images when the 'Detect contrast' algorithm is applied.

The lower three images show:

- The left image.
  - In green, the component contour as found by the pre-pick inspection.
  - In red, a rectangle fitted to the contour drawn in green. This will be used as the detected position of the component. The visible corners and the center of the component are marked with red crosses.
- The middle image shows the found component in white and the background in black.
- The right image shows a histogram.

  Normally the *Detect contrast* method is chosen when two clear maxima are found in the histogram, like in the one shown in Figure 7-30. *Auto* uses this histogram to determine which of the methods to use.

If the tray type *Inspect algorithm* field has been set to *Detect edges*, only one image is shown at the lower part of the image. Figure 7-31 shows an example.

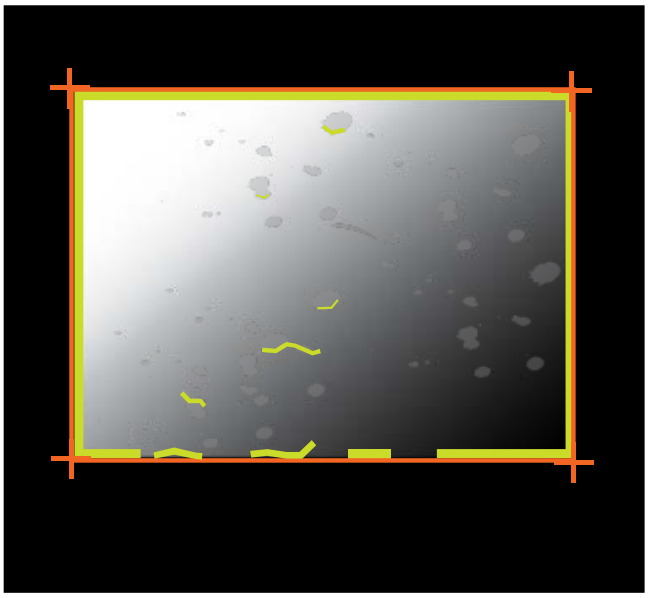

Figure 7-31. Image shown by the 'Detect edges' algorithm.

– In green, the detected edge points in the image.

– In red, the visible part of a rectangle representing the component. The visible corners and the center of the component are marked with red crosses.

In Figure 7-31 it can be seen that edge points were found along three of the component sides. Some edge points were also found in the body of the component. This data is enough to calculate the component position.

Referring to Figure 7-31, decreasing the *Edge contrast* value might result in finding the whole fourth side but maybe at the expense of finding lots of edge points in the body of the component and possible a failed component search. On the other hand, increasing the *Edge contrast* value would maybe get rid of the edge points in the component body but also less edge points would be found on the right side of the component.

Remember to set the parameter back to *No* when you have finished, as having the view mode set to *Yes* considerably decreases the mounting speed.

Tray Reference Guide

This part of the chapter describes the various tray magazine windows. To visualize the connection between the fields in these windows, a tray structure figure with a description is also included, see below.

The tray windows are describe on the following pages:

– *Tray Types Window* on page 7-38.

– *Trays Windows* on page 7-41.

– *TEX Pallets Window* on page 7-46.

Tray Structure in TPSys

Tray information in TPSys is set and updated in several steps and windows. The information in these windows is connected to each other as shown in Figure 7-32.

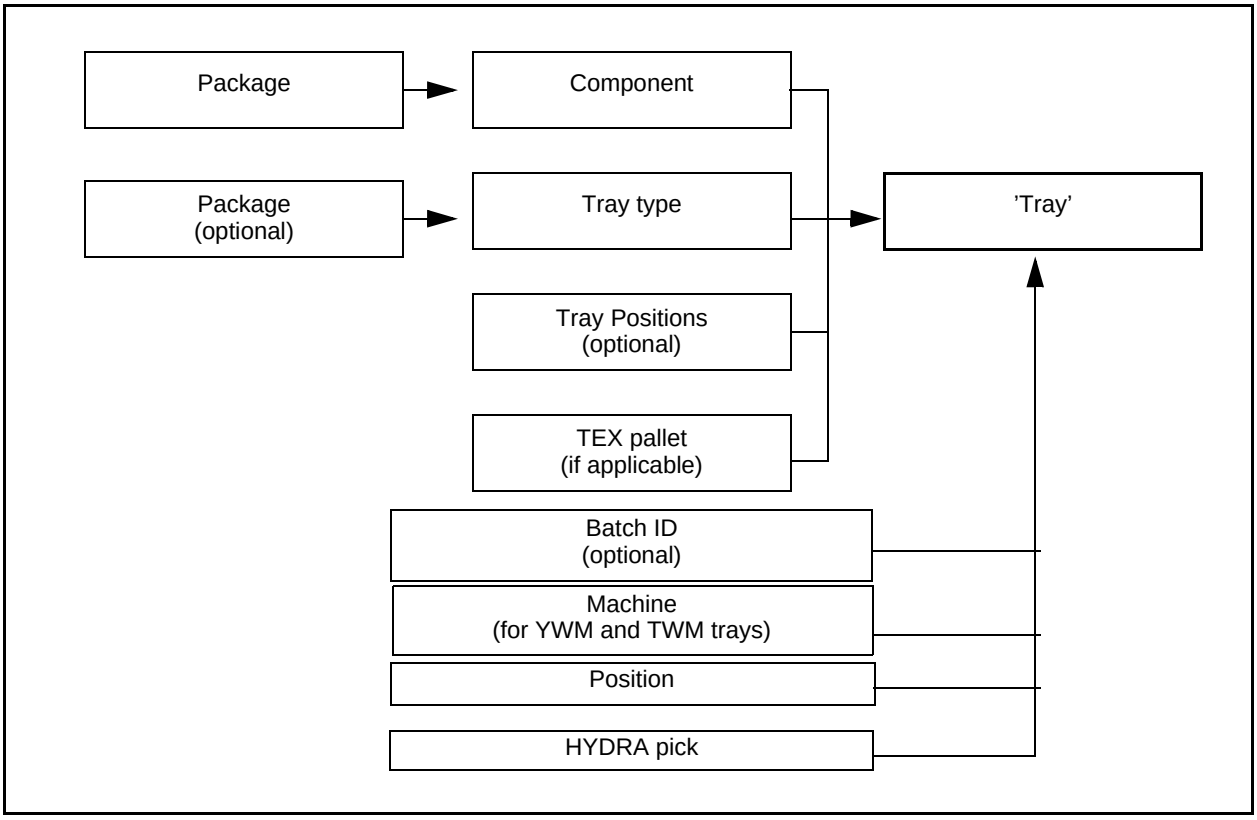

Figure 7-32. Tray information structure.

The contents of a matrix tray is stored as a 'Tray'.

In one of the tray windows the geometry information about a matrix tray is stored in the *Tray type* field.

A component and a tray type are linked to 'Tray'. Optionally a tray position may also be linked to 'Tray'. In the TEX Tray Exchanger unit a TEX pallet is also linked to 'Tray'. Some additional tray data is added directly in the 'Tray' window, for instance remaining component quantity and batch information.

Tray Types Window

The *Tray Types* window contains a list of various matrix trays that can be used in production. By means of this window the tray geometry can be defined. No component related information is stored in this window.

To open the *Tray Types* window, select *Magazine* > *Tray Types* in the main menu.

The *Tray Types* window layout is shown in the miniature figure to the left. All included entries are described below.

Command keys

F6 – Select magazine

The default viewing area of the camera is the Y-Wagon Magazine. By pressing <F6> the viewing area can be changed to the Tray Wagon Magazine or to the TEX Tray Exchanger.

F7 – Select package angle

Press <F7> to set a typical package angle in the matrix tray by using a package outline. This angle is relative to the machine coordinates, and determine how the components are loaded in the tray. Normally, the components should be related to the notched corner found on most matrix trays. This angle is not saved, only used during the creation of the tray type.

Type Names

This list contains names of available tray types. Move up and down in the list by using the arrow keys. You can search for a tray type by simply entering the first characters of the tray type name.

Type Data

This box contains the following information about the selected tray type:

Name

A unique tray type name or number.

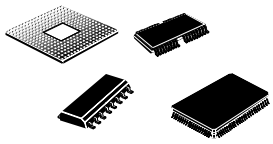

Typical package

Optional field, which is only needed if the matrix tray pockets are larger than the camera view. Note that it does not have to be the correct package for the component in the matrix tray. What is important is that the lead pattern is similar so that the *Lead toggling* feature will work correctly (see below).

To edit, select the *Typical package* field, press <Tab> and select a suitable package, or type the package name.

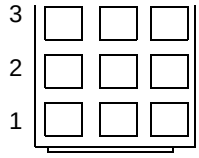

Number of rows

Number of rows in the tray type. The maximum number of rows is 100.

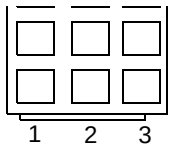

Number of columns

Number of columns in the tray type. The maximum number of columns is 100.

Width/length

Width is the tray dimension along the X axis of the machine. Length is its dimension along the machine Y axis of the machine.

You can either type these values into the field, or use the camera. To use the camera, press <F1> and center the tray corners in the order indicated on the screen. The figure shows the lower left corner (A), the lower right corner (B), and the upper left corner (C).

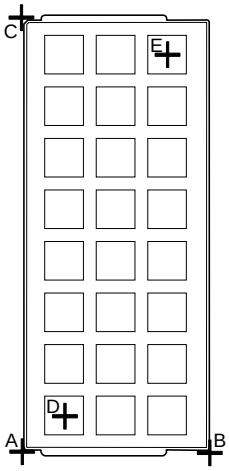

Lower left component position

The distance from the lower left tray corner to the center of the lower left component. You can enter the values by typing or by measuring with the camera. To use the camera, press <F1> and center the camera cross hairs on the lower left component (D).

Column step/row step

The center-to-center distance between columns or rows. These values can be entered in the same way as the value for the lower left component. If the camera is used, the upper right component (E) is centered. TPSys then calculates the tray steps automatically.

Existing fiducial marks

Yes – The matrix tray has two marks that can be used as fiducial marks.

No – No fiducial marks are to be used. This is the default setting.

First fiducial mark position

This field is only used if the *Existing fiducial marks* field is set to *Yes*. Enter the X/Y coordinates of the first tray fiducial mark by typing or by pressing <F1> and measuring with the camera, as described above.

Second fiducial mark position

This field is only used if the *Existing fiducial marks* field is set to *Yes*. Enter the X/Y coordinates of the second tray fiducial mark by typing or by pressing <F1> and measuring with the camera, as described above.

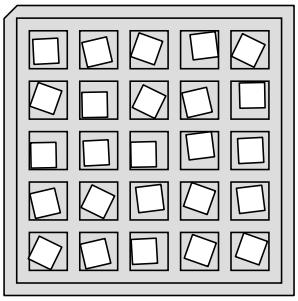

Inspect before pick

Some components, such as flip chips or bare die, may have a large play in the tray pockets. It may therefore be necessary to establish the actual component location before picking it. It is only used for single mount heads.

This inspection establishes the position of the component, and the component is then picked in the center. It is assumed, that 45° is the maximum rotation of the component in its pocket.

There are two options for this feature:

Yes – The components in the tray are inspected before they are picked.

No – No inspection is made. This is the default setting.

For pre-pick inspection on trays in the TEX Tray Exchanger, place the tray on a narrow JEDEC TEX pallet, or place it so that the components are at least 7 mm above the TEX pallet bottom.

Setting *Inspect before pick* to *Yes* will slow down the component picking from trays when using this tray type.

Inspect algorithm

This field is only used if the *Inspect before pick* field is set to *Yes*. The following options are available:

Auto

Analyzes the contrast between the component and the tray in the image, using a histogram. If the contrast is good enough *Detect contrast* is used, otherwise *Detect edges* is used.

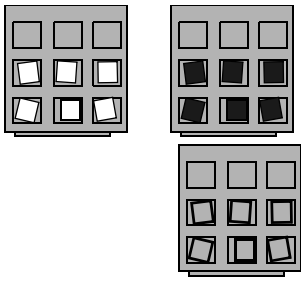

Detect contrast

Finds components by searching for a component that is clearly brighter or darker than the surrounding tray.

Detect edges

Finds components by searching for contrast differences around the component edges. This is slower than the *Detect contrast* option, but works also if the component has the same brightness as the tray, as long as there is a detectable component edge.

See page 7-35 for trouble-shooting the *Inspect before pick*.

Edge contrast

This field is only used if the *Inspect before pick* field is set to *Yes* and the *Inspect algorithm* is set to *Detect edges* or *Auto*.

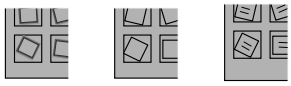

Edge contrast

In this field the level of contrast to search for is controlled. A fuzzy edge needs a low value; a sharp edge should have a high value. Components with features such as visible text on top, may require a high value in order to avoid detecting the text.

Default value is 10.

Tray pocket width/length

This field is only used if the *Inspect before pick* field is set to *Yes*.

The width and length of the pocket in the tray. You can type the values or press <F1> and use the camera.

Trays Windows

All information the system needs to be able to pick from a tray is available in a Trays window.

Open a tray window in one of the following ways, depending on the magazine type:

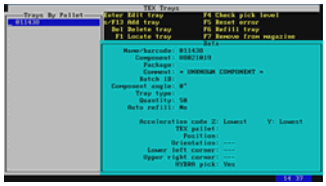

- Select *Magazine* > *TEX Magazine* > *Trays* in the main menu.
- Select *Magazine* > *Tray Wagon Magazine* > *Trays* in the main menu.
- Select *Magazine* > *Y-Wagon Magazine* > *Trays* in the main menu.

The *TEX Trays* window layout is shown in the miniature figure to the left. The windows for the different magazines are similar and the description below is the same. A few fields are, however, specific to a particular magazine. These are also described with a comment about the magazine type.

Command keys

F1 – Locate tray

A tray can be located by positioning two components on the tray, two tray corners, or two fiducial marks. To locate the tray, select the tray in the *Trays By Name* list and press <F1>. You can select *Position* in the *Data* box and press <F1> as an alternative.

F4 – Check pick level

This check is used if the components in the tray are HYDRA mountable. Press <F4> to perform a check if the HYDRA can reach the components in the tray or not. TPSys will update the *HYDRA pick* field in the *Data* box with the result. The tray must be located before you can check the pick level.

F5 – Reset error

If a tray has been shut for picking due to pick errors, it can be reset again by pressing <F5>.

F6 – Refill tray

Update the quantity and batch information for a tray by selecting it in the *Trays By Name* list (see below) and pressing <F6>, see *Quantity* below. If a field in the *Data* box is selected, this key has no effect.

F7 – Remove from magazine

The selected tray is cleared from the magazine by pressing <F7>. If a field in the *Data* box is selected, this key has no effect.

F8 – Remove all from magazine

All trays in the magazine are cleared by selecting any tray in the *Trays By Name* and pressing <F8>. If a field in the *Data* box is selected, this key has no effect. This function is not available in the *TEX Trays* window.

Trays By Name

This list contains all trays in the system for the selected type of tray magazine.

In the first position of the list, one of the following characters can be shown:

*

The tray contains parts that are needed in the current layout. Quantity must be above 0 for this symbol to be shown.

–

The tray is empty.

!

Pick error.

Press <Space> to toggle the sort order in the box.

Data

This box contains information about the selected tray.

Name/barcode

A unique name of the tray. This is also the barcode for the tray, which is used if the tray is loaded with the TPSys barcode scanner.

Component

The component in the tray. You can type the component name, or press <Tab> and select from the *Components* window. If the component is not defined, you can add it.

Package

Read-only field. The package that is associated to the selected component.

Comment

Read-only field. Comments about the selected component.

Batch ID

This optional field is intended for a component batch number. The batch number can be either typed into the field, or entered by using a TPSys barcode scanner.

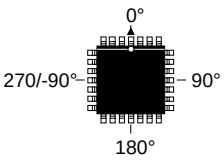

Component angle

The component angle in the selected tray type. Usually, this should be related to the notched corner found om most matrix trays. The angle will not change no matter how the tray has been put into the machine.

Tray type

The tray type for the tray. Type the name or press <Tab> and select from the *Tray Types* window.

Quantity

The remaining number of components in the tray. To update the quantity, select the tray in the list and press <F6>. You can also edit the field in the *Data* box.

The quantity is counted down each time a component is picked from the tray. So, the quantity field always indicate the remaining number of components in the tray. Maximum quantity is defined by the row and column numbers in the tray type. If you set a lower quantity than a full tray, the system starts picking after the missing components. For example if you enter quantity 10 for a tray that has maximum 24 components, the system will start picking from pocket 15.

Components are picked in the same order. For a full tray this means starting with pocket 1, which is the lower left corner position.

You may use a negative quantity value. TPSys will see this as the number of missing components in the tray. The negative value will be converted to remaining quantity when you press <Enter>. As an example, you have ten components remaining in a tray. If you enter –14 as quantity for a tray, TPSys starts picking from pocket 15. Quantity will be set to 10 the moment you press <Enter>.

Auto refill

Enables or disables messages when trays are out of components.

– *Yes*

  If the tray runs empty during assembly, a dialog box is shown that calls the operator's attention to refill the tray.

– *No*

  No dialog box is shown.

Toggle between *Yes* and *No* by pressing <Space>.

TEX Trays window only.

Acceleration code Z, Y

The *Acceleration code Z* field controls the acceleration of the TEX Tray Exchanger unit's up and down movements. Select the field and press <Space> to choose between *Highest*, *High*, *Low* and *Lowest*. For all but the most extreme trays, *Highest* or *High* is the recommended setting. *Low* or *Lowest* will slow down the tray changing in the TEX Tray Exchanger unit for all trays in it.

The *Y* field controls the acceleration of the TEX Tray Exchanger shuttle movements. Select the field and press <Space> to choose between *Highest*, *High*, *Low* and *Lowest*. For trays where the components are held firmly in place, *Highest* or *High* is the recommended setting. Use *Low* or *Lowest* if the components easily jump out of their pockets when the tray is handled. *Low* or *Lowest* will slow down the tray changing in the TEX Tray Exchanger unit for that tray.

TWM Trays and *YWM Trays* windows only.

Machine

When a tray is located, the system puts in the current machine name automatically in this field.

TEX Trays window only.

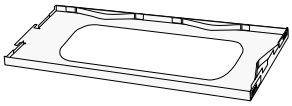

TEX pallet

Trays in the TEX Tray Exchanger unit are placed on TEX pallets. These TEX pallets have unique names, so that the system will know on which pallet a tray is located. You can either type the TEX pallet name, or press <Tab> and select from the *TEX Pallets* window.

Position

For a newly inserted tray, or a tray removed from its location, this field is left blank.

To locate the tray, you can either select a pre-defined tray position or use the camera.

– To link the tray to a pre-defined tray position, type the tray position name or press <Tab> and select from the *TEX Tray Positions* window, the *TWM Tray Positions* window, or the *YWM Tray Positions* window.

  A tray position can have only one tray linked to it at a time, just like a tape feeder can have only one component loaded in the same feeder.

– To locate the tray using the camera, press <F1> and select two corners, first and last component, or two fiducial marks for positioning, see page 7-24.

Orientation

This field is only used if you have selected a pre-defined tray position in the *Position* field. It defines the tray orientation and has four possible options. Default value is *Same as tray type* (recommended). There are also four types of tray positions. In the tray position window, the *Type* field defines where a tray corner is located. The tray *Orientation* defines the angle of the matrix tray. Please see page 7-29 for more details.

Lower left corner

This field shows the machine coordinates for the lower left tray corner, if the camera was used when locating the tray.

Upper right corner

This field shows the machine coordinates for the upper right tray corner, if the camera was used when adjusting the tray.

HYDRA pick

This field defines if the HYDRA head can pick from this tray or not.

– *Yes*

The system can freely use the HYDRA mount head or the standard mount head (Z/Fi) when picking from the tray. The package linked to the component in the tray must have settings that allow picking with the HYDRA. See the *TPSys, Programming Manual* for further information.

– *No*

The system will only use the standard mount head when picking from this tray. This is the default value.

The field can be edited either by selecting the field and pressing <Space> to toggle option, or by pressing <F4> when the located tray is selected in the list. The latter method performs a test that automatically gives the correct setting to this field.

The tray has to be located before <F4> is pressed.

TEX Pallets Window

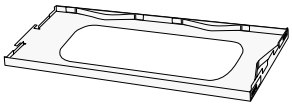

The purpose of the *TEX Pallets* window is to list all TEX pallets in the system.

The TEX Tray Exchanger will automatically scan and add available TEX pallets to this list. The TEX pallets can be renamed.

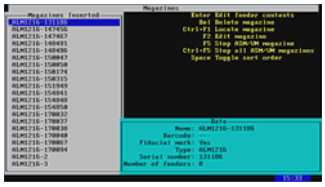

To open the *TEX Pallets* window, select *Magazine* > *TEX Magazine* > *TEX Pallets* in the main menu.

The *TEX Pallets* window layout is shown in the miniature figure to the left. All included entries are described below.

Names

This list shows all TEX pallets available in the system, and if shared databases are used, all in the TPSys network. Magazine position numbers are shown in brackets. Position numbers are only shown for TEX pallets defined and inserted in the TEX Tray Exchanger. If shared databases are used, the machine number is also shown in brackets for TEX pallets inserted in other machines.

Press <Space> to toggle the sort order in the box.

Data

Name

The system automatically defaults the TEX pallet name based on its type and barcode. It is possible to change the name.

Type

There are two types of TEX pallets:

– *XS*

Narrow pallet for the TEX Tray Exchanger with two cassettes.

– XD

Double width pallet for the TEX Tray Exchanger with one cassette.

Barcode

Barcodes are generated automatically for XS and XD pallets as the TEX Tray Exchanger scans the barcodes on TEX pallets.

8. Board Handling

Various board handling systems are available for MYDATA pick and place machines.

MYDATA pick and place machines can be configured with an automated internal conveyor system but also with a manual board handling system.

This chapter describes both these systems and the safety system that is involved in board handling. These descriptions are found in the following sections:

- Safety
- Internal conveyor systems.
- Inline systems.
- Manual load systems.

Safety

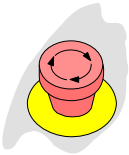

The board handling systems are included in the machine safety system. Pressing the emergency stop button stops the Y wagon.

The Y wagon and the internal conveyor are both covered with hoods to ensure that no foreign objects, hands, or fingers are within the risk area. These hoods have safety switches, which stop the Y wagon as soon as a hood is opened.

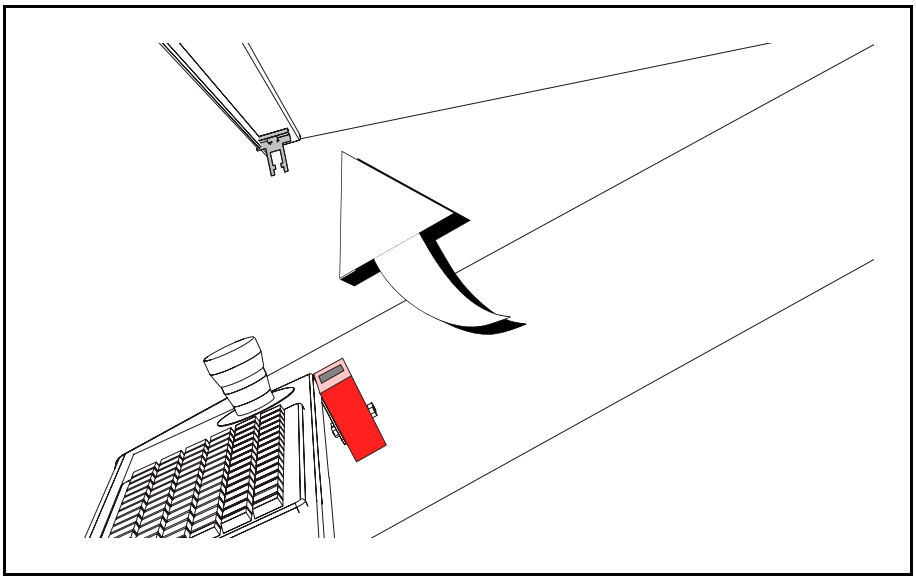

Figure 8-1. Safety switch on a hood.

All machine movements are stopped if a hood on an internal conveyor with Electronic Cabinet 2, EC2, is opened.

Always press the emergency stop button down before opening a hood to ensure full safety.

Internal Conveyor Systems

The purpose of an internal conveyor is to carry unpopulated boards from an external conveyor system into the machine and position the board. After assembling, the internal conveyor carries the populated board back to the external conveyor system.

The MY100 machine type can be configured with one of four different internal conveyor systems, T3 – T6. The difference between these systems is the width, which affects the board size to be assembled. The names of these systems reflect the unit width. The T3 type occupies three magazine positions and the T6 type six magazine positions.

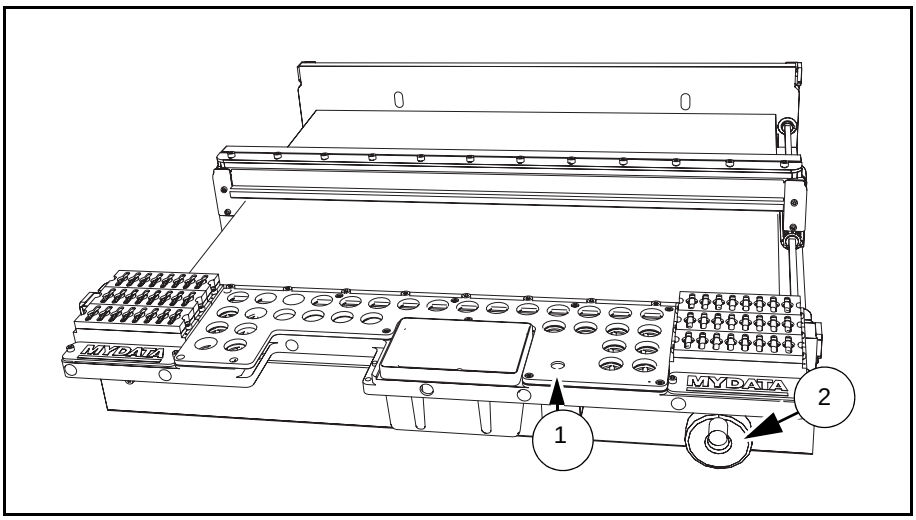

Figure 8-2. Internal conveyor controls.

If you want to insert boards manually into the conveyor, there is a grab/release button ('1' in Figure 8-2) for this purpose. Pressing this button opens the conveyor, making it possible to insert a board. The conveyor grabs the board when the button is released.

The conveyor width can be set manually by turning a grab/release knob (2).

Internal Conveyor Control

An internal conveyor operational mode is controlled by two conveyor switches. A conveyor can also be manually controlled by some menu commands. These control options are described below.

Conveyor switches

To get an internal conveyor to grab and load boards automatically, the following switches have to be set to *Yes*:

1004 Conveyor switches

0001 Conveyor fetch
0002 Conveyor leave

These switches, and how to access them, are described in the *Switches* section in *Appendix A – Menu Reference Guide*.

Menu commands

The internal conveyor can be manually controlled by selecting some menu commands.

To access these commands, select *Production* > *Conveyor Control* in the main menu. The following commands are available:

Conveyor Load/Grab

Loads a new board, adjusts the position (for automatic fiducial mark search), and grabs the board.

Conveyor Release & Unload

Releases the board and moves it out of the machine.

Set Conveyor Width

This feature only affects the Y-wagon conveyor on the machine. Surrounding conveyor system is not affected. The feature is used to:

- Read off the current conveyor width, which is shown after selecting this menu option. If a layout is loaded, the board width is shown (zero is shown for a board which has no board size set).
- Set the conveyor width by typing the conveyor width in the dialog box and confirming it. The conveyor will change to the new width after emptying present boards, if not empty.

You can also press <F1> and set the width by using the trackball.

The *92.0031 Flags; Automatic width* parameter must be set to *Yes* to make this feature available.

Inline Systems

The internal conveyor system, described in the previous section, is usually connected to an external conveyor system. The junction between these conveyor systems is located on the rear of the machine, see Figure 8-4.

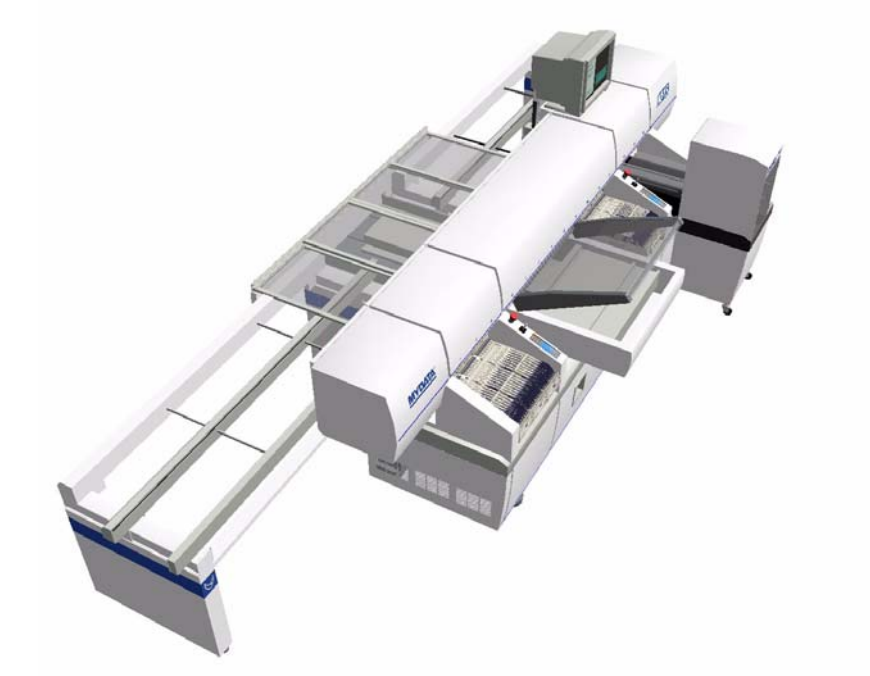

Figure 8-3. A part of an inline system.

The external conveyor system carries an unpopulated board to the machine, where the board enters the internal conveyor.

The internal conveyor moves the board into the assembling position of the machine. After assembling, the internal conveyor moves the board back to the external conveyor.

The external conveyor carries the populated board further in the system, for instance to an oven, to another pick and place machine for additional assembling, or to a board loader or unloader.

In this machine, a manual load ML3 – ML6 adapter can be used to manually load boards. Manual load is further described in the next section.

Manual Load Systems

There are four types of manual load adapters for this machine type. These are called Manual Load ML3 – ML6 adapters. Each of these names reflects the width of the conveyor, in which they can be installed.

Design

A manual load adapter is an insert that is installed in an internal conveyor beside the conveyor rails. It is used as an alternative to the internal conveyor.

The load adapter consists of a metal plate with a border like a frame, in which there is a groove on the inside. This groove can keep boards in the correct level for assembling, see Figure 8-4.

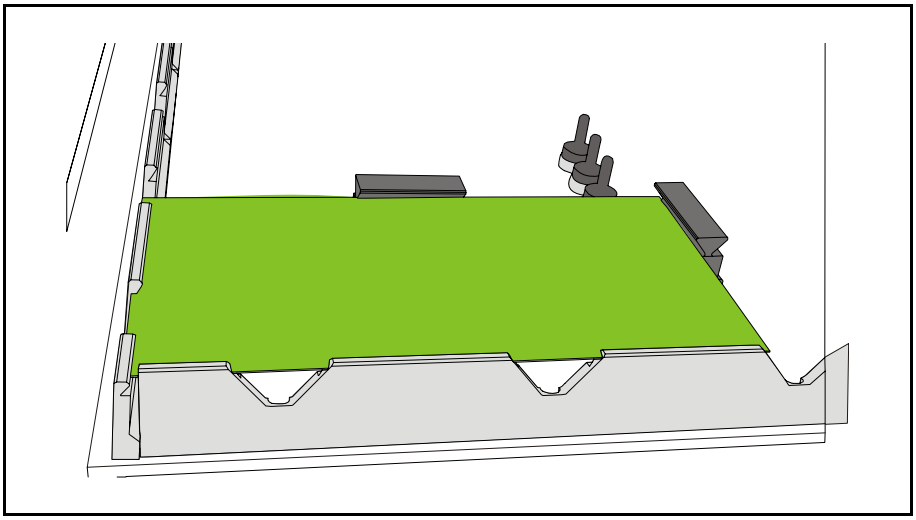

Figure 8-4. A board in a manual load adapter.

To keep the free edges of a board, there are magnetic supports with a groove in the same level as the load adapter border, see Figure 8-5.

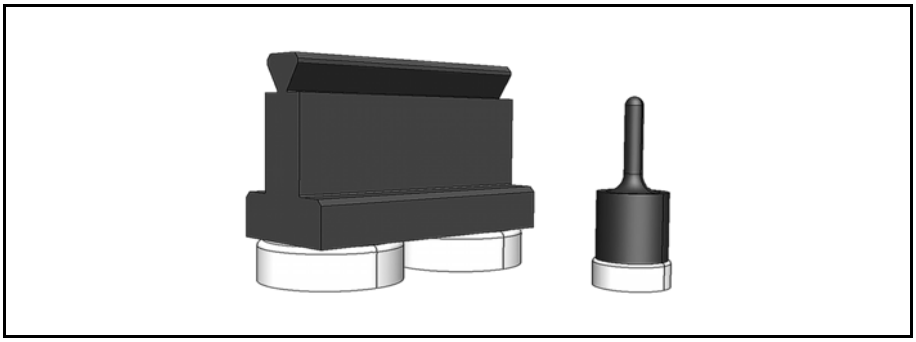

Figure 8-5. Magnetic supports.

There are also magnetic support pins to be placed under boards. These are intended for large or thin boards that need support underneath to be kept plain during assembling.

Figure 8-6 illustrates an example of a board with magnetic support pins under the board.

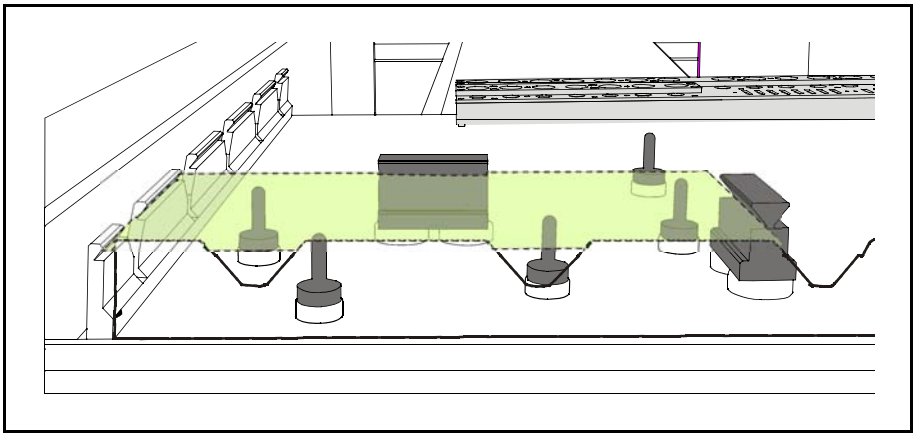

Figure 8-6. A board with magnetic support pins.

Magnetic support pins under a board ensure that the board is not flexing during assembling. A flexing board may lead to a decreased placing accuracy and placing speed.

Boards can also be kept by magnetic supports only anywhere on the manual load adapter, see Figure 8-7.

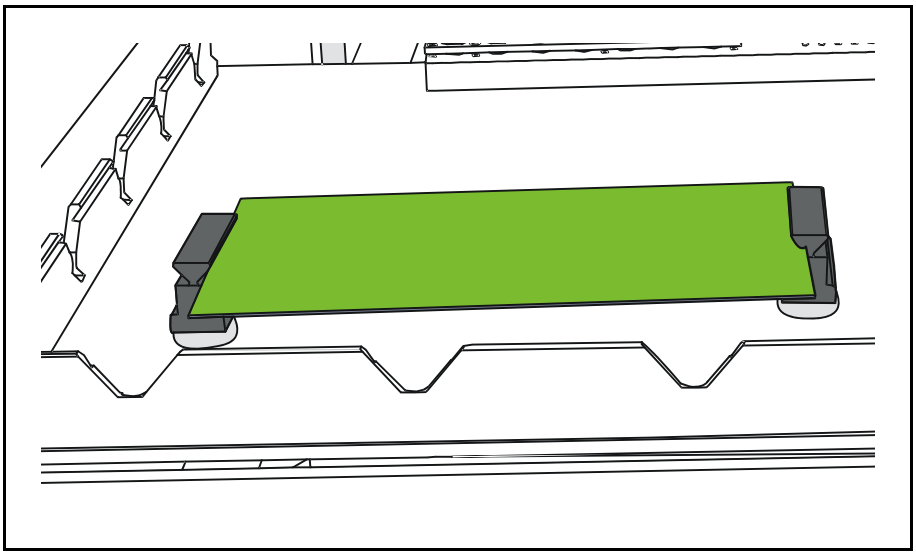

Figure 8-7. A board kept by magnetic supports only.

This makes it possible to put several boards of the same or different sizes on the manual load adapter and mount them in the same layout.

Component trays

Component trays can be placed on the manual load adapter on areas not occupied by boards.

Loading Boards

Boards are loaded into the manual load adapter as follows:

1. Move the Y wagon to the front position in one of the following ways:
   - Press <Ctrl> + Y on the keyboard.
   - Select *Production* > *Move Y Wagon* > *Front Position* in the main menu.
2. Press the emergency stop button down.
3. Open the hood.
4. Put the boards included in the selected layout on the manual load adapter.

   If you place the boards in the same way as last time the layout was used, the locating time will be short.
5. Close the hood.
6. Release the emergency stop button.
7. Select *Production* > *Assemble* in the main menu.

9. Tools and Tool Banks

This chapter describes the various tools that are used in MYDATA pick and place machines. It also describes tool banks, how to operate tool banks, and the tool bank configuration for the MY100 machine type.

The tool description includes mount and glue tools for the single mount head and mount tools for the HYDRA mount head.

This chapter also describes a system for changing HYDRA tool nozzles automatically, called HYDRA Speedmount ATE.

These descriptions are divided into the following main parts:

Single Mount and Glue Tools

A single mount tool consists of a tube mounted in a cylinder, see Figure 9-1. The tool is held in the tool head by two O-rings on the cylindrical section of the tool. The O-rings should be lubricated to avoid drying out.

A mount tool is connected to an air pump and to a vacuum pump via valves. A negative pressure for holding components as well as an over pressure to quickly release components can thus be provided through the tool.

Mount tools must be kept free from dirt and foreign particles to prevent the tube from being blocked.

Single mount tools are available with spring loaded or stiff tubes, in black color. Black tools are used to achieve a better contrast at optical centering of components.

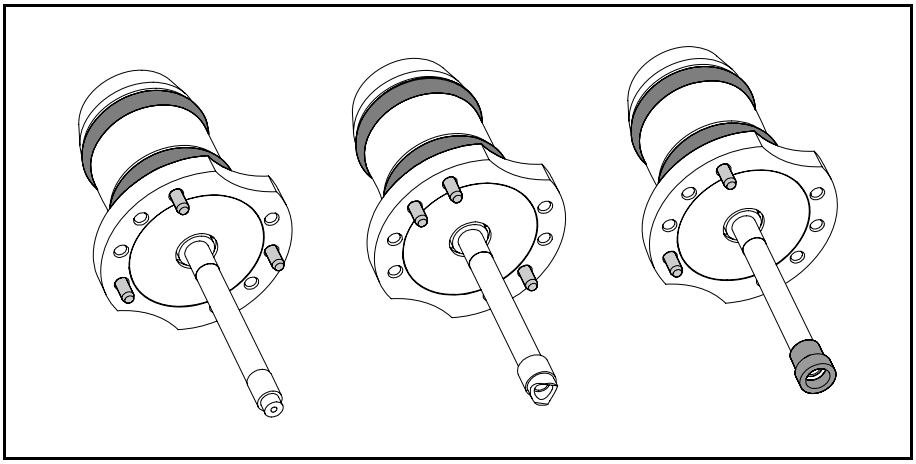

Figure 9-1. Stiff tools.

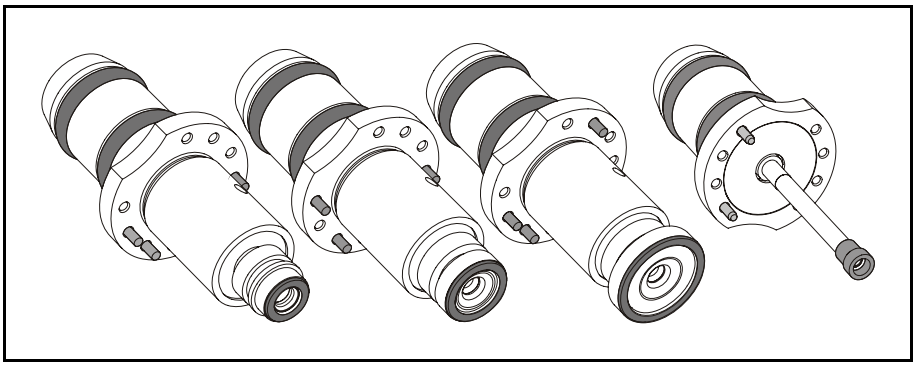

Figure 9-2. Spring loaded tools.

Tools for applying glue have the same cylindrical upper section, but a solid shaft instead of a hollow tube. There are also custom designed tools available like tools with flat pipe nozzles for connectors.

Tools are coded and they are stored in tool banks when not in use. Each position in a tool bank has its own tool code. Tool codes and tool banks are described below.

Tool installation is detailed in the service manual.

Tool codes

Single mount and glue tools are coded with pins representing one letter and two digits, see Figure 9-3.

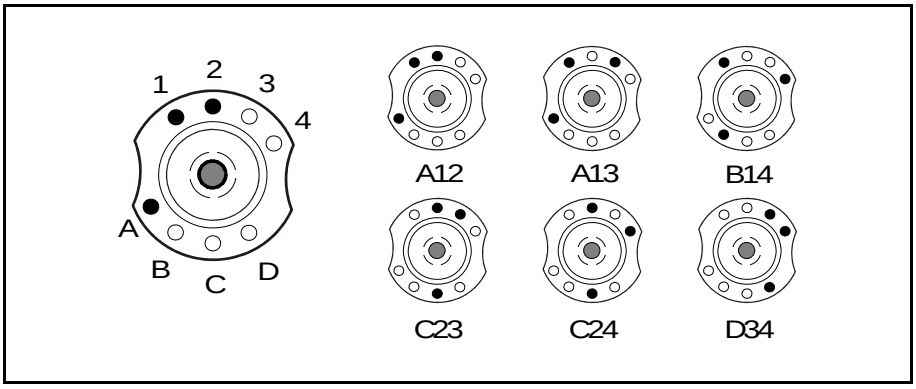

Figure 9-3. Tool coding.

- The letters can be A, B, C and D.
- The digits can be 1, 2, 3 and 4.

Each tool has three pins indicating its code.

Tool bank

Tools are stored in a tool bank in the machine when not in use. From this bank the machine picks required tools.

Each tool position in a tool bank is defined by its tool code, see Figure 9-4.

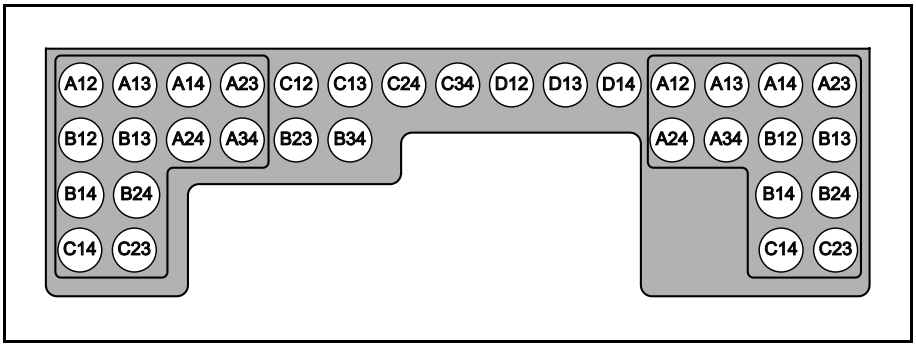

Figure 9-4. Tool bank.

This machine has two X wagons and, normally, a tool bank with three sections. Two of which for single tools dedicated each X wagon (within the markings in the figure) and one for tools to be shared by the X wagons (in the middle).

HYDRA Mount Tools

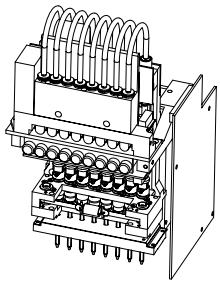

A HYDRA unit is a speed placement unit with eight mount tools.

The eight HYDRA mount tools can be moved downwards and upwards in common or individually. Eight components can thus be picked from a magazine either simultaneously or individually and then be placed individually.

A HYDRA unit can pick components from all Agilis magazines and from TM8, TM8F, TM8F, TM16 and TM1216, TM Flex, stick magazines, and trays.

A HYDRA mount tool consists of a tube with a changeable nozzle, called H01 – H06. These are shown and detailed in the table.

Tool nozzle	Name	Used for package*
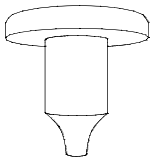	H01 (white)	0402–1206-06 package range.
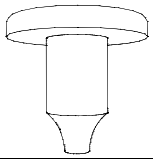	H02 (yellow)	0603–1210 package range and small SOIC packages.
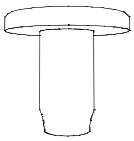	H03 (red)	1206–2512 chip packages and SC-59, SO8, SO14, SOT89, SOT223, SSOP20, SSOP24, SSOP28, and M3216–M7343 packages.
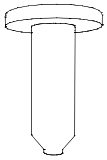	H04 (blue)	0603–1206 chip packages, MELF3514, SOD-80 and SOT-23 packages. This tool has a rubber tip designed to handle round components as well as tall capacitors.
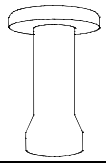	H05 (brown)	SO16/20/28, QFPs measuring maximum 15×15 mm tip-to-tip.
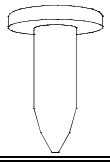	H06 (green)	0201–0402 package range.

* Further packages may have been added after issuing this manual.

Mount tools must be kept free from dirt and foreign particles to prevent the tubes from being clogged up.

Tool tube replacement is detailed in the service manual. It has to be carried out by service personnel.

HYDRA Speedmount ATE

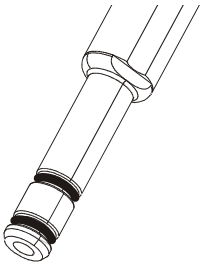

HYDRA Speedmount ATE, Automatic Tool Exchanger, is a system for changing HYDRA tool nozzles automatically.

Each tool nozzle is held in place on a tool tube by O-rings, see the figure. This ensures that the tool nozzle is always properly aligned and can be replaced without re-calibrating the HYDRA unit.

HYDRA tool nozzles are stored in a HYDRA tool bank when not in use. When tool nozzles are to be exchanged, the HYDRA unit moves to a tool bank where the tool nozzles can be exchanged.

The HYDRA Speedmount ATE tool bank is described below.

HYDRA tool bank

A standard HYDRA tool bank is shown in Figure 9-5. This tool bank has a capacity of 16 tool nozzles. These are kept in 16 positions, 8 slots by 2 rows, see the figure.

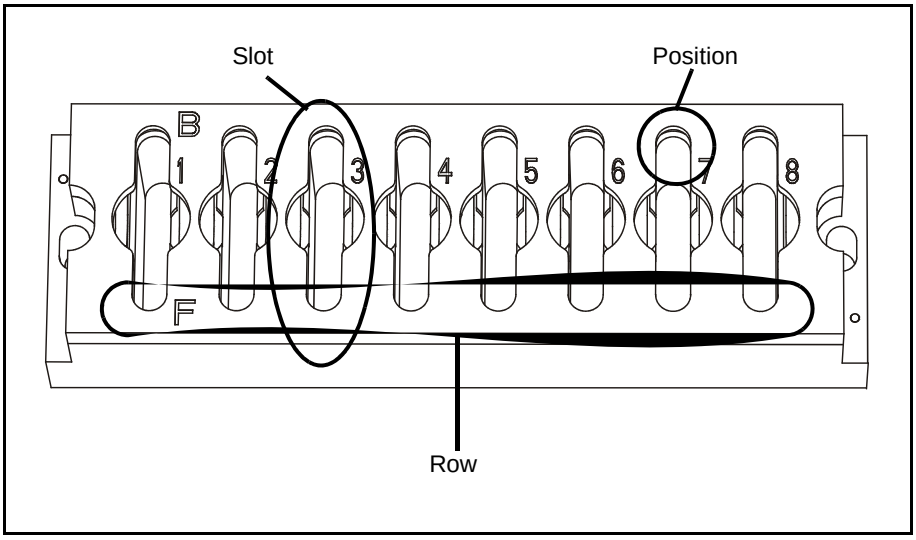

Figure 9-5. Tool bank slots, rows, and positions.

The rows are marked ’F’ for front and ’B’ for back. The front row faces the operator.

Tool nozzles are fetched by the HYDRA unit as described below.

Fetching tool nozzles

The first tool tube (position 1 in the HYDRA unit) fetches a tool nozzle from one of the two slots marked ’1’ in the tool bank, see Figure 9-6.

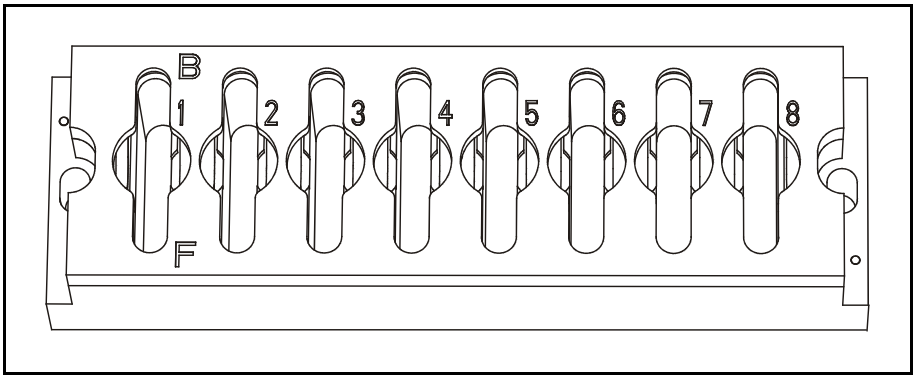

Figure 9-6. Standard HYDRA tool bank.

The second tool tube (position 2 in the HYDRA unit) fetches a tool nozzle from a slot marked ’2’.

This is done for all tool nozzles to be fetched, simultaneously for tool nozzles in the same row.

Operation

This section describes operational actions that usually have to be performed when using a HYDRA Speedmount ATE tool bank.

- Inserting tools automatically, page 9-7.
- Removing tools automatically, page 9-9.
- Inserting tools manually, page 9-10.
- Removing tools manually, page 9-11.
- Disabling tool bank slots, page 9-12.
- Enabling tool bank slots, page 9-12.
- Displaying tools in the HYDRA unit, page 9-13
- Displaying tools in HYDRA tool banks, page 9-13.
- Disabling tools, page 9-13.

Inserting tools automatically

When inserting tool nozzles automatically, you manually apply the nozzles to the tool tubes on the HYDRA unit and let the HYDRA unit place them into the tool bank.

CAUTION! Do not manually insert a tool nozzle into an installed HYDRA tool bank because the HYDRA unit will, most certainly, bend the tool tube.

For optimal speed and efficiency it is recommended that you have only one type of tool nozzles in each bank row.

Insert tool nozzles automatically as follows:

Or, Press <F10> and select *HYDRA Tool Utility*.

1. Select *Utility* > *Installation and Calibration* > *HYDRA Tool Utility* in the main menu.
2. Select *Insert automatic HYDRA tools*. The HYDRA unit leaves any automatically inserted tool nozzles in the tool bank. If manually inserted tool nozzles remain on the tool tubes, you must remove them manually.
3. Select tool bank and front or back row from the list of available rows. Front row is the row facing the operator.
4. Select the tool bank positions where you want the tool nozzles to be inserted. To be selectable, the positions must be empty, the HYDRA unit must be turned on, and there must be no manual tool nozzles inserted.

'Intervention position' is described on page 9-8.

5. Select tool type to insert. The system checks if the HYDRA unit is ready to install new tools. If it is, the HYDRA unit moves to the intervention position.

If the intervention position is located over a present magazine, remove the magazine before confirming.

6. Confirm movements down of the selected tool tubes.
7. Press the emergency stop button down.

   One of the selected tool tubes are moved down to the intervention level, see Figure 9-7. It stays down for 50 seconds.

'Intervention position' is where the HYDRA unit can move tools down to the intervention level.

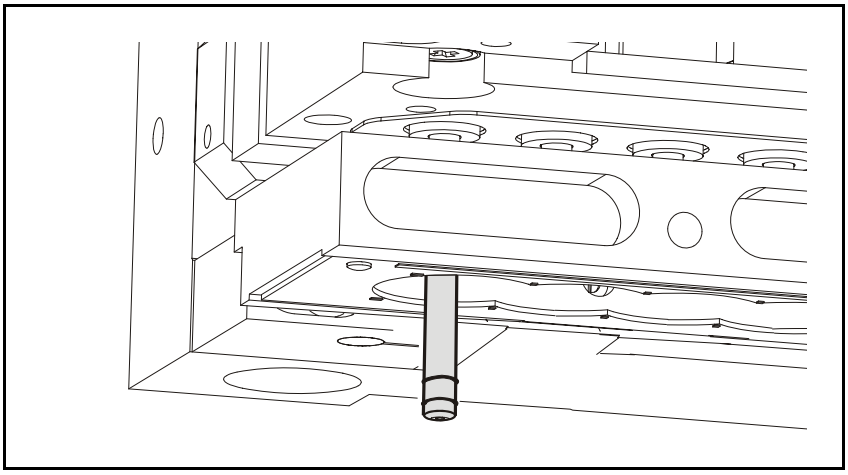

Figure 9-7. Intervention level for automatic tool insertion.

8. Apply the tool nozzle type requested by the system.
9. Confirm the tool insertion.

   The tool tube moves up, see Figure 9-8, and the next tool tube moves down.

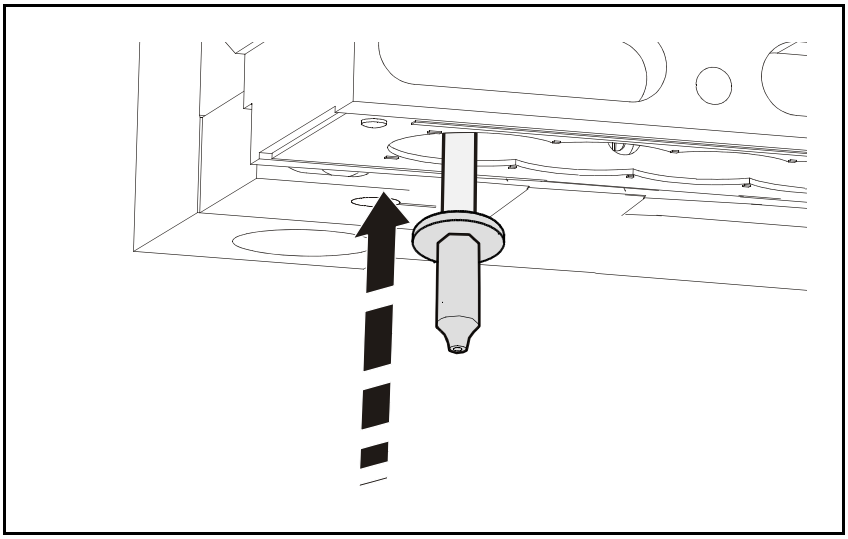

Figure 9-8. Applied nozzle moves up.

WARNING! Keep your hands clear of the machine.

10. Repeat the last two steps for the remaining tool nozzles.
11. Release the emergency stop button.
12. Confirm the tool insertion.

    The system will check if the tools are inserted. The HYDRA unit will then place the inserted tool nozzles into the tool bank.

Removing tools automatically

Remove tool nozzles as follows:

Or, press <F10> and select *HYDRA Tool Utility > Remove automatic HYDRA tools*.

'Intervention position' is described on page 9-8.

1. Select *Utility > Installation and Calibration > HYDRA Tool Utility > Remove automatic HYDRA tools* in the main menu.

   The HYDRA unit leaves any automatically inserted tool nozzles in the tool bank. If manually inserted tool nozzles remain on the tool tubes, you have to remove them manually. The HYDRA unit moves to the intervention position.
2. Select tool bank and front or back row from the list of available rows. Front row is the row facing the operator.
3. Select the tool bank positions to remove tool nozzles from.

   To be selectable, the positions have to contain nozzles, the HYDRA unit must be turned on, and there must be no blocking manual tool nozzles on the HYDRA tool tubes.

   The HYDRA unit fetches the selected tool nozzles and moves to the intervention position.

If the intervention position is located over a present magazine, remove the magazine before confirming.

---

4. Confirm movements down of the selected tool tubes.
5. Press the emergency stop button down.

   One of the selected tool tubes are moved down to the intervention level, see Figure 9-7. It stays down for 50 seconds.
6. Remove the tool nozzle requested by the system.
7. Confirm the tool removal.

   The tool tube moves up, see Figure 9-8, and the next tool tube moves down.
8. Repeat the last two steps for the remaining tool nozzles.
9. Release the emergency stop button.

   The system will check if the tools are removed.

Inserting tools manually

Normally, tool nozzles are inserted automatically. You can, however, insert tool nozzles manually. For instance when running a short series of components with a special type of tool nozzle.

Insert tool nozzles manually as follows:

Or, press <F10> and select *HYDRA Tool Utility > Manually Insert HYDRA Tools*.

1. Select *Utility > Installation and Calibration > HYDRA Tool Utility > Manually Insert HYDRA Tools* in the main menu.

   The HYDRA unit leaves any automatically inserted tool nozzles in the tool bank.

2. Select tool tubes to apply tools to.

   To be selectable, the HYDRA unit must be turned on, and there must be no blocking manual tool nozzles installed.

'Intervention position' is described on page 9-8.

3. Select tool type to apply. The HYDRA unit moves to the intervention position.

If the intervention position is located over a present magazine, remove the magazine before confirming.

---

4. Confirm movements down of the selected tool tubes.
5. Press the emergency stop button down.

   One of the selected tool tubes are moved down to the intervention level, see Figure 9-7. It stays down for 50 seconds.

6. Apply the tool nozzle type requested by the system.
7. Confirm the tool insertion.

   The tool tube moves up, see Figure 9-8, and the next tool tube moves down.

WARNING! Keep your hands off the machine.

---

8. Repeat the last two steps for the remaining tool nozzles.
9. Release the emergency stop button.
10. Confirm the tool insertion.

    If a tool bank is installed, the system will check if the tools are applied.

Tool nozzles that have been inserted manually must be removed manually.

Removing tools manually

Normally, tool nozzles are removed automatically. You can, however, remove tool nozzles manually. For example if an error that prevents you from removing tool nozzles automatically has occurred.

Tool nozzles that have been inserted manually must be removed manually.

Remove tool nozzles as follows:

Or, press <F10> and select *HYDRA Tool Utility > Manually Remove HYDRA Tools*.

1. Select *Utility* > *Installation and Calibration* > *HYDRA Tool Utility* > *Manually Remove HYDRA Tools* in the main menu.

   The HYDRA unit leaves any automatically inserted tool nozzles in the tool bank.

2. Select the tool nozzles you want to remove.

   To be selectable, the HYDRA unit must be turned on, and there must be at least one manual tool nozzle on the HYDRA tool tubes.

   The HYDRA unit moves to the intervention position.

'Intervention position' is described on page 9-8.

If the intervention position is located over a present magazine, remove the magazine before confirming.

3. Confirm movements down of the selected tool tubes.
4. Press the emergency stop button down.

   One of the selected tool tubes are moved down to the intervention level, see Figure 9-7. It stays down for 50 seconds.

5. Remove the tool nozzle requested by the system.
6. Confirm the tool removal.
7. Release the emergency stop button.

   If a tool bank is installed, the system will check if the tools are removed.

Disabling tool bank slots

It is possible to disable a tool bank slot. For example, if the HYDRA unit for some reason cannot fetch tools from a tool bank slot.

Disable tool bank slots as follows:

Or, press <F10> and select *HYDRA Tool Utility > Disable Tool Slots in HYDRA Bank*.

1. Select *Utility > Installation and Calibration >.HYDRA Tool Utility > Disable Tool Slots in HYDRA Bank* in the main menu.
2. Select tool bank from the list of available tool banks.
3. Select slots to be disabled.

Disabled slots will not be used until they are enabled again. To enable slots, see below.

Enabling tool bank slots

HYDRA tool bank slots that have been disabled can be enabled as follows:

Or, press <F10> and select *HYDRA Tool Utility > Enable tool slots in HYDRA bank*.

1. Select *Utility > Installation and Calibration > HYDRA Tool Utility > Enable tool slots in HYDRA bank* in the main menu.
2. Manually remove any tool nozzle from the HYDRA unit that the system asks you to remove, if any, and confirm the removal.

   This is applicable if a tool nozzle, that resides in a disabled slot, is currently attached to a tool tube in the HYDRA unit.
3. Manually remove any tool nozzle from the tool bank that the system asks you to remove, if any.

   This is applicable if there are tool nozzles in the tool bank.

All HYDRA tool bank slots are enabled.

This is the only time you are allowed to manually remove tool nozzles from a HYDRA tool bank. You are NEVER allowed to manually insert tool nozzles into a HYDRA tool bank.

Displaying tools in the HYDRA unit

You can get information about tool nozzles currently attached to the tool tubes in the HYDRA unit.

1. Select *Utility* > *Installation and Calibration* > *HYDRA Tool Utility* > *Show HYDRA tools on HYDRA* in the main menu.

   A list, in which you can see information about tools currently attached to the tool tubes in the HYDRA unit, is shown.

Displaying tools in HYDRA tool banks

Information about tools currently installed in a HYDRA tool bank is available.

1. Select *Utility* > *Installation and Calibration* > *HYDRA Tool Utility* > *Show HYDRA tools in bank* in the main menu.
2. Select tool bank and front or back row from the list of available rows. Front row is the row facing the operator.

   A list, in which you can see information about tools currently installed in HYDRA tool banks, is shown.

Disabling tools

HYDRA tools can be disabled by setting some switches to disabling state. These switches are found in the *1002 Assembly switches* switch group.

These switches are accessible by selecting *Production* > *Switches* in the main menu.

The following switches affect HYDRA tools:

0033 HYDRA tool tube 1 – 0040 HYDRA tool tube 8

If any of these switches are set to *Disabled*, the corresponding tool is disabled. There is one switch for each of the eight tools.

These switches control the tools in the right HYDRA unit only, that is on the right X wagon.

0053 HYDRA tool tube 1 – 0060 HYDRA tool tube 8

If any of these switches are set to *Disabled*, the corresponding tool is disabled. There is one switch for each of the eight tools.

These switches control the tools in the left HYDRA unit only, that is on the left X wagon.

Tool Bank Configuration for MY100

This machine type is normally configured with a tool bank for single mount and glue tools and a number of HYDRA Speedmount ATE tool banks for HYDRA tool nozzles.

A tool bank configuration for the T3 – T6 internal conveyors, used in the MY100 machine type, is shown in Figure 9-9.

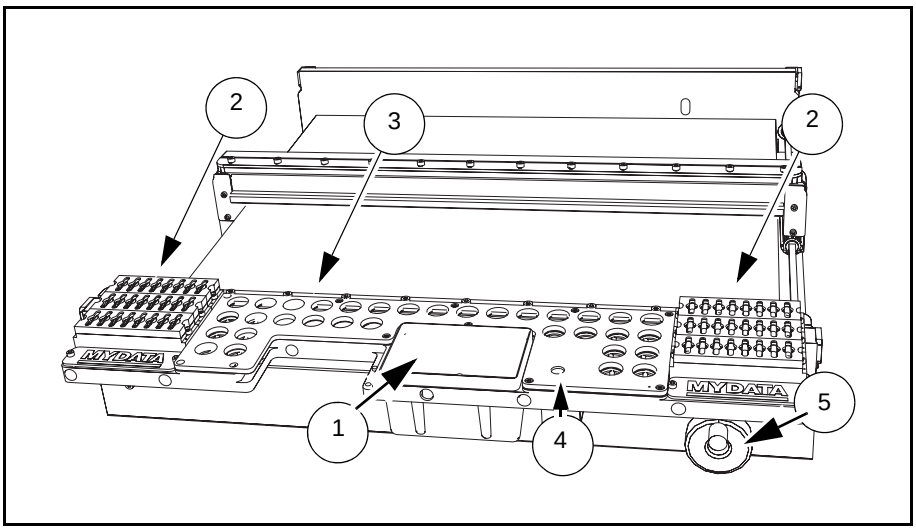

Figure 9-9. Tool bank configuration for MY100.

Main parts (pointed out in Figure 9-9):

1. Reject bin.
2. HYDRA Speedmount ATE tool banks.

   Described on page 9-5.
3. Single mount tool bank.

   Described on page 9-3.
4. Grab/release button.

   This button is used to insert boards manually into the conveyor. Pressing this button will open the conveyor, making it possible to insert a board. The conveyor grabs the board when the button is released.
5. Grab/release knob.

   The conveyor width can be set manually by turning this knob.

If a manual load table is used, the grab/release button and knob are not used.

10. Glue Station

Some components need to be glued onto boards. For this purpose MYDATA has developed a glue station, which is a flexible unit that can be inserted into a prepared magazine position when needed.

The glue station is described in the following way in this chapter:

- Product overview.

  This section describes all main parts, in order to illustrate the concept of the glue station.

- Installation

  Describes how to install the glue station in a prepared magazine position.

- Operation

  Points out what to do under operation, including glue refill.

Product Overview

Figure 10-1 points out the main parts of the glue station. These parts are briefly mentioned below.

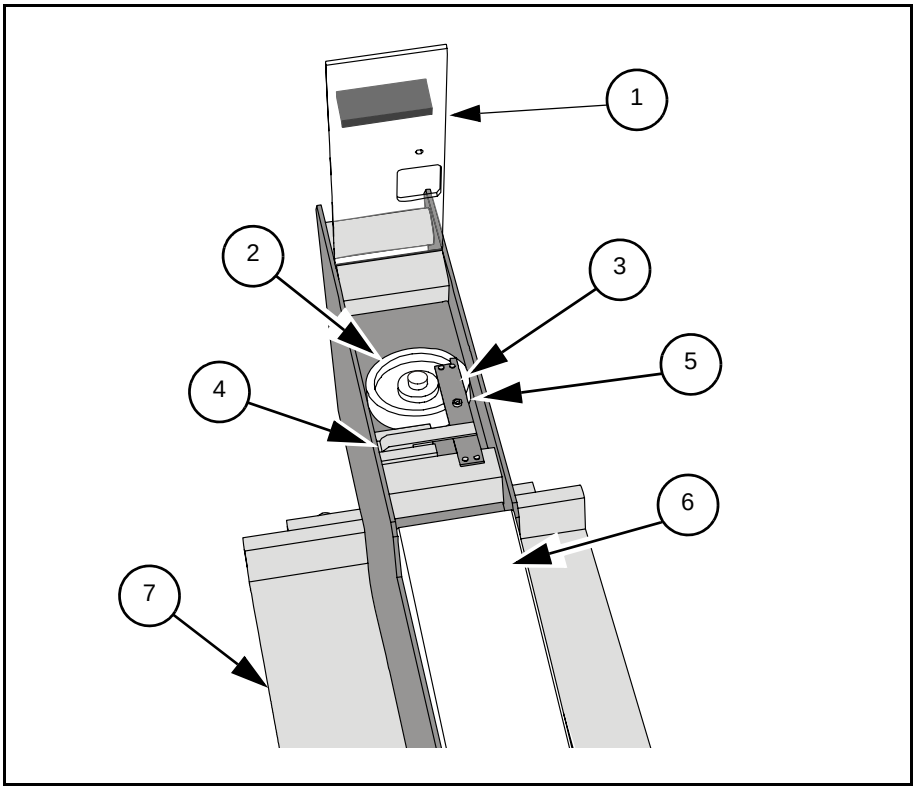

Figure 10-1. Glue station parts.

The glue station has the following main parts:

1. Plastic cover with handle.
2. Glue pot.

   The glue is kept in this rotating glue pot.
3. Leveling arm.

   This arm has a rake underneath, which ensures that the surface of the glue is kept smooth.
4. Tension arm.

   Keeps the leveling arm (3) in place.
5. Adjustment screw.

   The leveling arm (3) is adjusted to an appropriate level above the glue surface with this screw.
6. Cover
7. Base plate.

The glue station is inserted into a magazine position.

Installation

The glue station is inserted into a magazine slot. Due to certain preparations, this slot will be dedicated for use with the glue station. The function, as to magazines, will not be affected by this preparation.

Depending on machine configuration, the installation may differ from the description below. Details are available in document P-044-0001.

Install the glue station as follows:

1. Find the 26 pole, female header, flat XMF cable in the cable duct of the slot where the glue station is to be placed.

   Only magazine slots on the right side of the Y wagon can be used for a glue station.

2. Place the cable in the cable duct so that the free end comes up over the rear of the magazine slot cover.
3. Place the glue station in the magazine slot.
4. Connect the XMF cable coming up behind the slot to the XMF3 cable connector in the glue station. This cable is found at the front.

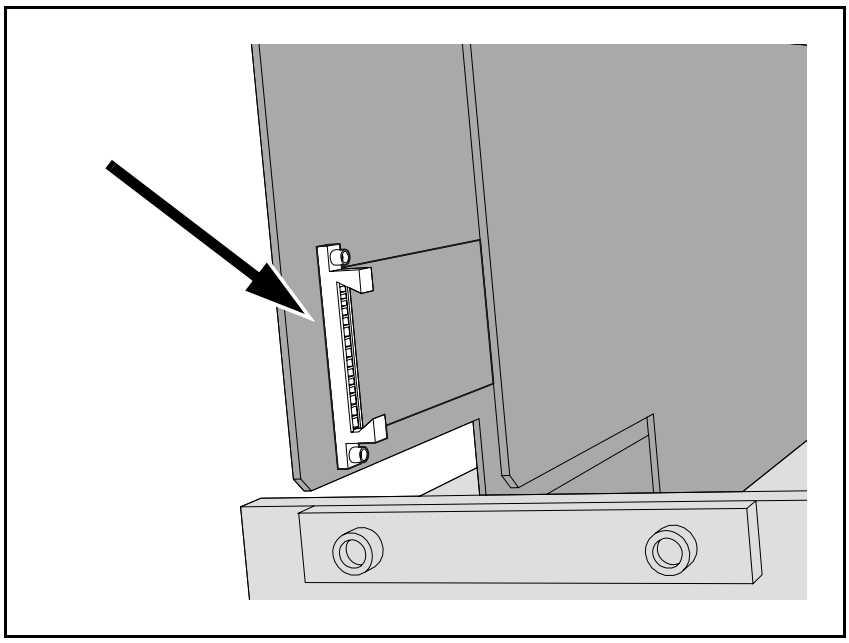

Figure 10-2. XFM3 cable.

5. Perform the TPSys installation procedure and calibrations according to the TPSys installation guide.

Operation

Adhesive dispensing is a sensitive process and the glue station is not an automatic unit. It is thus important to frequently check the glue station and the dispensing result when the glue station is in operation.

Check the glue dot positions, dot shapes, and dot volumes frequently.

The leveling arm has to be adjusted manually as the glue level becomes lower, see the next section.

Leveling Arm Adjustment

The leveling arm with the rake ensures that the surface of the glue is always smooth. This is important for the result of the dispensing.

As glue is being consumed during production, the glue level in the pot will sink. This means that the arm level has to be adjusted to compensate for the sinking glue level whenever necessary. This is done by using an Allen key and, through the hole in the plastic cover, turning the adjustment screw for compensation. See Figure 10-3.

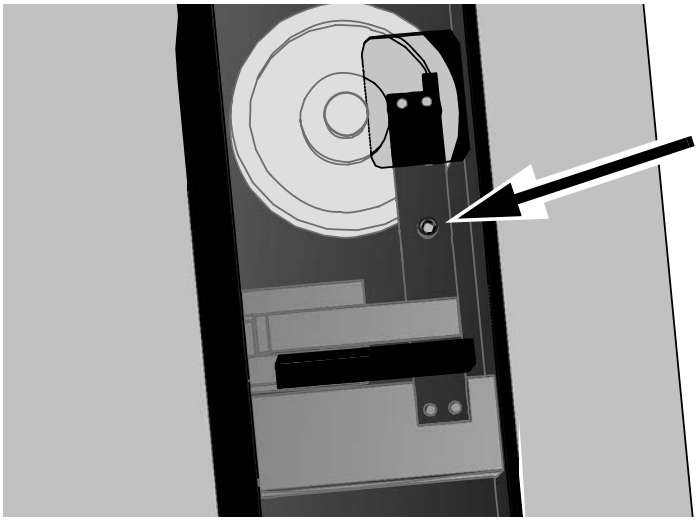

Figure 10-3. Adjustment screw.

When the glue level is too low, glue has to be refilled, see below.

Refilling Glue

The glue in the glue station has to be refilled when the level is too low. This can be prepared by filling up the spare glue pot and then replace the pot in the glue station.

To remove the glue pot for replacement, do as follows:

1. Press the emergency stop button down and pull out the glue station from the magazine slot.
2. Lift the plastic lid, see the left part of the figure.

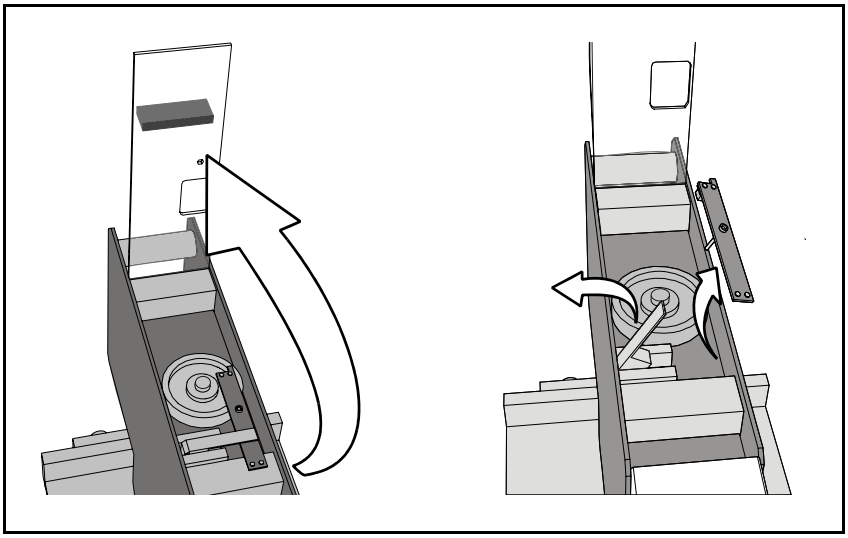

3. Open the tension arm by lifting it up and lifting out the levelling arm, see the right part of the figure above.
4. Lift out the glue pot, see the figure below.

   The glue pot is held in place by O-rings, so it should not require much force to remove it.

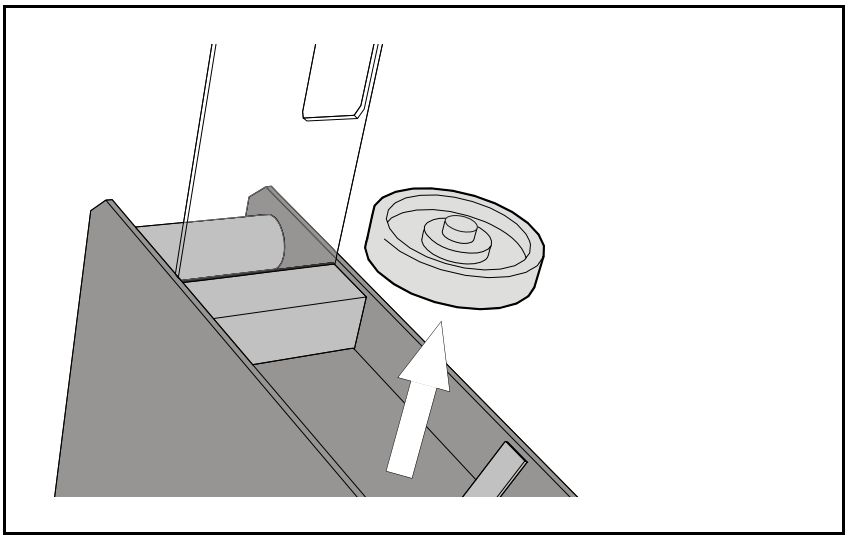

5. Replace the glue pot with the filled one, or fill it with glue and put it back.
6. Put the leveling arm back and fold the tension arm down.

   Do not forget to turn up the leveling arm with the adjustment screw.
7. Insert the station into the magazine slot.
8. The arm and glue tool must be adjusted to the refilled level.

11. Operational Features

This chapter details a number of operational features, described in the following sections:

Board Location

The purpose of this feature is to locate boards on the assembly table. Positions and angles are determined by centering fiducial marks.

There are two ways to locate boards:

1. Manual fiducial mark search.

   Manual fiducial mark search is used if a board position on the assembly table differs more than a couple of mm from the previous board, for instance after changing layout.

   Boards can be marked as non-present during manual fiducial mark search.

   A graphic overlay of the fiducial mark is shown on the screen when locating boards manually, provided the system has learned the mark.

2. Automatic fiducial mark search.

   Automatic fiducial mark search is used if a board on the assembly table is positioned within a couple of mm from the previous board, for instance after changing board in the same layout.

Manual and automatic fiducial mark search is detailed below and on the following pages as well as deviations of fiducial mark positions and switches for the board location feature.

Fiducial mark search commands cause machine movements. Before entering these commands check the following:

CAUTION! Ensure that there are no foreign objects on the assembly table, near the tool bank, or within the X wagon, Y wagon, or Tray Wagon Magazine moving areas, and that the single mount tool head and the HYDRA tools are in their upper positions.

Manual Fiducial Mark Search

Manual fiducial mark search is used when a board position differs more than a couple of mm from the previous board.

Boards can be marked as non-present during this procedure (detailed on page 11-6).

A graphic overlay of the fiducial mark is shown on the screen when locating boards manually. When locating small fiducial marks manually, the graphics can conceal too much of the fiducial mark, which can make the location difficult. Because of that the graphics can be toggled on/off by pressing <Ctrl> + <F3>.

Manual fiducial mark search can be carried out either directly from the main menu or via the assembling menu. Both ways are described below.

From the main menu

3. Select *Production* > *Locate Boards (Manually)*.

   A camera view from the positioning camera is opened.

4. Center the cross hairs on the fiducial mark of the board by using the trackball, see Figure 11-1.

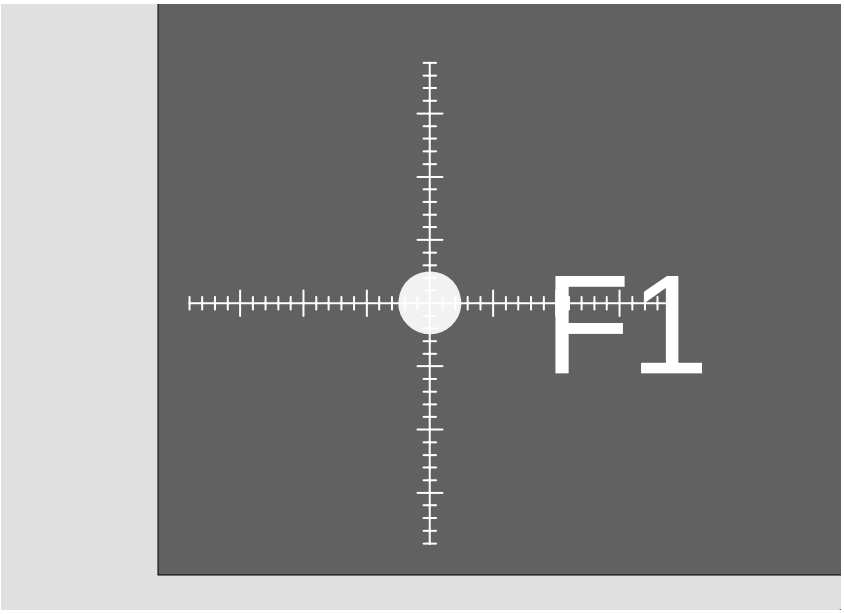

Figure 11-1. Centering fiducial mark F1.

5. Select *Ready* and press <Enter> to confirm the fiducial mark position.
6. Repeat the above steps for fiducial mark 2 (and 3 if used).

The centering must be performed in correct board order and fiducial mark order.

Fiducial mark and board numbers are shown in a box located in the upper left corner of the window.

From the assembling menu

Manual fiducial mark search can also be carried out from the assembling menu. It is performed as follows:

1. Select *Locate Boards (Manually)*.
2. Press <Enter>.
3. Center the cross hairs on the fiducial mark of the board and continue as described in the previous section.

Automatic Fiducial Mark Search

Automatic fiducial mark search can be used when the board position is within a couple of mm from the previous board.

The procedure is similar to the manual fiducial mark search, but there are two major differences:

- Automatic fiducial mark search is performed without confirming each fiducial mark manually.
- The camera is moved the shortest way between the fiducial marks, not in board or fiducial mark order.

Automatic fiducial mark search can be carried out either directly from the main menu or via the assembling menu.

From the main menu

Select *Production* > *Locate Boards (Automatically)*. An automatic fiducial mark search is performed, provided that:

- The *0003 Automatic fiducial mark search* switch is set to *Yes* (see the *Switches* section on page A-1).
- The board position is within a couple of mm from the previous board.
- The fiducial marks are learned by the system (see the TPSys programming manual).

If a search fails, the system switches temporarily to manual search. Use the trackball to center the failing fiducial mark. The system will then continue the automatic search for the remaining fiducial marks.

The board position variation is limited by the size of the scan area defined in the *Search area width* and *Search area length* variables in the *Fiducial Marks* window (described in the TPSys programming manual).

From the assembling menu

Automatic fiducial mark search can also be carried out from the assembling menu. It is performed as follows:

1. Select *Locate Boards (Automatically)*.
2. Press <Enter>.

Fiducial Mark Deviation

If the result of the fiducial mark search deviates from the defined values for the board, the system asks whether the board is to be accepted or not.

For more information about fiducial mark deviation, see the TPSys programming manual.

Pre-Defined Fiducial Mark Shapes

There are a number of pre-defined fiducial mark shapes that can be chosen when a new fiducial mark is created.

The shapes are: *Circle*, *Rectangle*, *Triangle*, *Cross*, *Butterfly* (shown in Figure 11-2), and *Generic* (described below the figure).

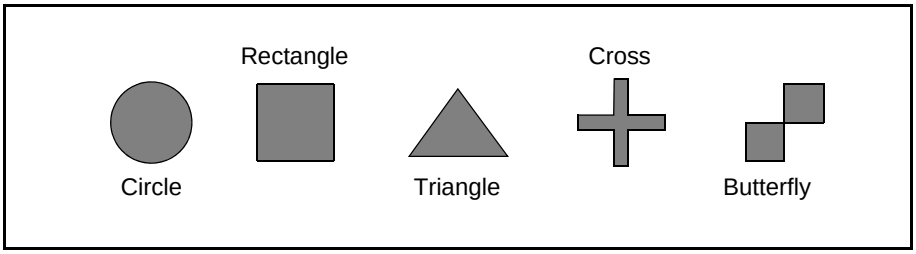

Figure 11-2. Pre-defined fiducial mark shapes.

Generic is a fiducial mark shape that has been taught. It does not necessarily have a defined geometry as the ones above.

Marking Board As Non-Present

The purpose of this feature is to temporarily skip a board, or a couple of boards, included in a multi-board layout, and to do it easy and quickly without changing switches, board programming, or layout settings.

If you, for instance, intend to mount 100 boards in a three-board layout, you will get one single board left after 33 layouts. With this feature, you can use the same three-board layout for the last board by marking two boards as non-present.

By using manual fiducial mark search, non-present marking can be performed prior to assembling. Until a non-present marking is cleared, the marked board will not be subjected to automatic fiducial mark search, glue application, or component mounting.

An alternative to the description below is to alter the PCB status in a loaded layout by using the *Panels* window.

Marking boards

Select *Production > Locate Boards (Manually)* in the main menu or *Locate Boards (Manually)* in the assembling menu.

When the first fiducial mark (only the first one) on each board is centered, the following two additional menu options appear:

- *Board not present* is shown in the menu box.
- *Mark board non-present* is shown in the upper right corner of the screen.

If you want to mark a board as non-present, then select *Board not present* and press <Enter>, or simply press <Del>.

Automatic Non-Present Board Detection

There is a non-present board detection feature in TPSys that automatically sets non-present status for boards that really are missing in layouts.

If this feature is on and the camera cannot measure any contrast on the position where the first fiducial mark should have been located, the board is automatically marked as non-present.

The automatic non-present board detection feature is toggled on/off by the *0014 Automatic* switch (description on page 11-8).

Clearing Non-Present Board Markings

Non-present board markings are active until cleared by one of the actions described below.

1. Unloading the layout. Do it in one of the following ways:

– Select *Production* > *Unload Layout*.

– Load another layout.

2. Assembling

Set the *0013 Remember non-present board flags* switch to *No*, see the next section. Non-present flags will be cleared when the current layout has been assembled.

3. Manual clearance.

Manual clearance of non-present board markings by selecting *Production* > *Assemble* > *Clear Non-Present Flags*.

This can be done provided that the *Clear Non-Present Flags* option is included in the menu (detailed in the next section).

Board Location Switches

A number of board location switches, involved in fiducial mark search, are accessed by selecting *Production > Switches > 1002 Assembly switches*.

All the assembly switches are shown in a box.

You can modify a switch setting as follows:

- Select switch by using the arrow keys.
- Select setting by pressing <Space> or by typing a value.

  Maximum and minimum values are shown in the information field for those entries where values are required.
- Select *Save and exit* and press <Enter>.

  Password may be required to save changes.

Switches for board location are:

0003 Automatic fiducial mark search

Yes – Automatic fiducial mark search is performed if *Locate Boards (Automatically)* in the *Production* menu or *Locate Boards (Automatically)* in the assembling menu are selected.

No – Automatic fiducial mark search is off.

0013 Remember non-present board flags

Yes – Non-present board markings remain after assembling the current board. The *Clear Non-Present Flags* option is included in the *Assemble* menu.

No – Non-present board markings are cleared after assembling the current board. The *Clear Non-Present Flags* option is not included in the *Assemble* menu.

0014 Automatic

Yes – Non-present board markings are set automatically if no contrast is found when centering fiducial mark 1.

No – Automatic non-present board detection is off.

The *0013 Remember non-present board flags* switch should be set to *No* if the *0014 Automatic* switch is set to *Yes*.

Electrical Test On/Off

Electrical test of components can be switched on/off. This is done in the *Components* window.

You can change the electrical test setting as follows:

1. Select *Edit* > *Components* in the main menu.
2. Toggle *Electrical test* to *Yes* or *No* by pressing <Space>.
   - *Yes* means that electrical test is performed for this component type.
   - *No* means that no electrical test is performed for this component type.

     This option does not affect any electrical properties specified for the component. This information is preserved.

In order for TPSys to perform electrical test of components, the *0001 Test* switch in the *1001 Test switches* group must be set to *Yes*.

This switch is further described in *Appendix A – Menu Reference Guide*.

Mount and Glue Switches

This feature allows you to globally enable or disable component mounting and glue application. A layout that contains instructions for glue application and component mounting can, by manipulating these switches, be used to:

- Apply glue only.
- Mount components only.
- Apply glue and mount components.

The mount and glue switches are shown in a box by selecting *Production > Mount/Glue Switches*. You can modify a switch setting as follows:

- Select option by using the arrow keys.
- Select setting by pressing <Space>.
- Select *Save and exit* and press <Enter>. No password is required to save changes.

0001 Glue

Problems? See below!

Yes – Glue is applied for components that are defined with glue dots in the mount list.

No – Glue is not applied for any component.

0002 Mount

Problems? See below!

Yes – Components set to be mounted in the mount list are mounted.

No – No component is mounted.

Problems

- Glue is not applied even if the *0001 Glue* switch is set to *Yes*.

  To get glue to be applied, the following points must all be fulfilled:

  - The *Glue* entry in the *Components* window must be set to *Yes* for the component.
  - The *Glue* entry in the *PCBs* window must be set to *Yes* for the component.
  - The glue dot type indicated in the *Type* entry in the *Packages* window must be included in the *Glue Dots* window.

- Components are not mounted even if the *0002 Mount* switch is set to *Yes*.

  To get components to be mounted, the following points must all be fulfilled:

  - The *Mount* entry in the *Components* window must be set to *Yes* for the component.
  - The *Mount* entry in the PCBs window must be set to *Yes* for the component.
  - The *0005 Invert meaning of component mount/glue flags* switch must be set to *No*.

    Select *Production > Switches > 1002 Assembly switches* to access this switch.

Layout Status

The purpose of the *Layout Status* feature is to log layout assemblies and, if an assembly is not completed, store the mount status. When the remaining components are to be mounted, the stored layout status is loaded whereupon the layout assembly can be completed. When a layout status is loaded, the remaining components only are mounted.

Layout status is saved if a layout assembling is stopped manually or terminated incomplete and:

- the *Skip board?* question is answered with *No*.
- the *Save layout status?* question, shown when the layout is unloaded or another layout is loaded, is answered with *Yes*.

Layout status is also saved if a power failure or minor system error occurs.

The system will remind you about existing status when loading layouts. If you want to list the layout status, select *Production* > *Layout Status*.

Layout Names

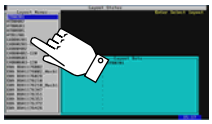

This list contains all layouts in the system, with or without saved layout status. Use the arrow keys or <PgUp>, <PgDn>, <Home>, or <End> to select layout.

You can search for a layout in the list by simply entering the first characters of the layout name.

Layout Data

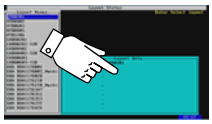

This box contains name and comments of the selected layout.

Saved Status

When you load a layout, it may have saved status. A dialog box will inform about it. Saved layout status is displayed if you select *Yes* in this dialog box. The *Layout Status* window can also be opened from the layout window described on page 11-11.

After loading the layout status, the incomplete layout assembly can be resumed and completed. Put the board (or boards) included in the layout on the assembly table and resume the assembling with the *Start Assembling* command as usual.

Saved status information is network shared, that is the layout assembling can be resumed in another machine than the one it was originally assembled in, provided two or more MYDATA machines are networked together.

The saved status window is described below.

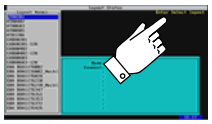

Command keys

Load status

Selected layout status is loaded by pressing <Enter>. After loading, the layout assembly can be resumed and completed.

Delete status

Selected layout status is deleted by pressing <Del> and confirming the deletion.

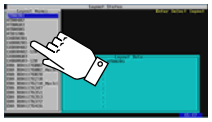

Comments, Machines

In this box existing layout status entries are shown. Each status entry is represented by a line that displays a status comment and the machine identity.

The comment text was typed into the *Save comment* field when the incomplete layout was unloaded.

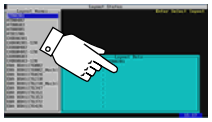

Data

Layout

Layout name.

Machine

Machine identity.

Comment

Comment (same as above).

Saved

The time when the status was saved.

Clearing Status

You can clear current layout status by selecting *Production > Clear Layout Status* in the main menu. You can also select *Clear Layout Status* in the assembling menu, available while assembling.

Note that only the currently loaded layout status is cleared. If no layout is loaded, this command has no effect.

You can see the result of this command by selecting *Production > Edit Layout* and selecting layout and PCB before and after the clearance. Mounted components are indicated with the M letter before clearing. After clearing, none of the components are indicated.

Magazine Kit

This feature uses all available information about magazine contents to make a list of magazines required for a particular layout.

Component trays used by the Y-Wagon Magazine, Tray Wagon Magazine and TEX Tray Exchanger are also included in the kit information.

Next time you are going to assemble a layout, you can examine, modify, and print out a magazine kit list.

Prior to the next assembling, load the magazines as detailed in the list and apply the magazine kit into TPSys.

If MYLabel is installed, all magazine load information shall be entered into TPSys by using the MYLabel barcode scanner. See page 11-18.

You can open and modify a magazine kit offline but you cannot apply it offline.

Creating a Magazine Kit

To create a magazine kit do as follows:

1. Load the layout for which the magazine kit is to be created.
2. Select *Magazine* > *Create Magazine Kit* in the main menu.
3. Enter a name for the new magazine kit. The name is, by default, suggested to be the same as the layout name.

Now, the system starts scanning all the magazines for components used in the currently loaded layout. If a component is found in a magazine not inserted in the machine, you can choose to include the magazine in the magazine kit or skip it.

Magazine Kits Window

Magazine kits are maintained and edited in the *Magazine Kits* window.

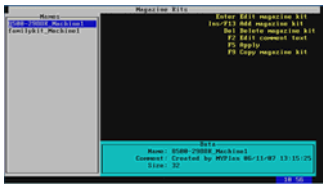

To open the *Magazine Kits* window, select *Magazine* > *Magazine Kits* in the main menu.

The *Magazine Kits* window layout is shown in the miniature figure to the left. Included command keys are described below.

Command keys

F2 – Edit comment text

The kit comment text can be modified by pressing <F2>.

F5 – Apply

Pressing <F5> will apply the selected kit, after confirming the application in a dialog box.

To apply a magazine kit means that the magazine information in the magazine kit is written to the magazine list. *Existing information in the magazine list is overwritten.* This is applicable only to components used in the magazines. Magazine data for components not included in the layout are not changed.

If a magazine included in the kit is not inserted in the machine, you can choose to apply the magazine kit information or skip it. This is done in a dialog box with the following options:

Yes

Applies the kit information even if the a magazine is not inserted in the machine.

Select another magazine

A new dialog box is opened, in which you can either type in the new magazine name or select from a list, reached by pressing <Tab>.

Cancel

The kit information is not applied.

F9 – Copy magazine kit

The selected magazine kit can be copied by pressing <F9> and entering a new name and any comments in a dialog box.

Assembly Preparation

The following preparation shall be carried out before assembling a layout using the magazine kit feature:

1. Print out the magazine kit information.
2. Load the magazines strictly as detailed in the printout.
3. Apply the magazine kit.

If an assembled layout is to be assembled again in the future, then create a magazine kit for it before applying a new kit.

Printing a Magazine Kit

You can print out a magazine kit as follows:

1. Select *Print > Magazine Kit* in the main menu.
2. Select whether you want to print a specific kit or all kits. If you select *Print All Magazine Kits*, you must confirm this in a dialog box.

The printed list will contain the following information:

Magazine kit name
The name of the selected magazine kit.

Type Mag./Slot/Feeder
- The magazine type.
- User name of the magazine.
- The position in which the magazine is inserted. A hyphen (–) is displayed when a magazine is not inserted in the machine.
- The magazine feeder for the component.

Component/Quantity
Component name as stated in the *Components* window, and number of components in the layout.

Component comment
User comment text for the components.

Stock location
The store location as stated in the *Components* window.

Barcode Scanners

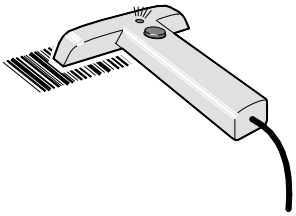

A barcode scanner can be used to read component names, removable feeder and magazine data when programming boards and components.

Barcode scanning is a convenient and fast way of entering information such as component names, magazines, quantities, and component orientations into the system without typing or selecting from different windows.

There are two types of barcode scanners available for the MYDATA pick and place machines:

- TPSys barcode scanner.
- MYLabel barcode scanner.

TPSys Barcode Scanner

A TPSys barcode scanner is an optional feature.

To be able to use a TPSys barcode scanner on TM and VMF30 magazines, some barcode labels are required. These are provided by MYDATA.

Stand alone server

Barcode scanning can be done on stand-alone data servers while other operations are running. At least one of the machines in a network has to be equipped with the optional barcode feature.

Configuring

The TPSys barcode scanner is configured by scanning the following three barcodes:

Code 128.

9600, 7, E, 2.

Aiming and reading beam setting.

Scan these barcodes from top to bottom (the down most code must be read as the last code).

MYLabel Barcode Scanner

MYLabel is a separate program that keeps track of component carriers (tapes, sticks, and trays) used in the production. A barcode scanner is included in the MYLabel system.

As TPSys does not support the carrier function this information is stored in a PC database.

To ensure that the MYLabel database is valid, component and loading information must be entered by using the MYLabel barcode scanner.

Entering magazine information by using magazine kits or by importing data will break the link between the carrier database in the PC and the component list in TPSys.

For further information about MYLabel, contact MYDATA.

The descriptions in this chapter does not include the MYLabel facility.

TM and VMF30 Magazine Barcode Labels

All TM and VMF30 types of magazines must be equipped with a magazine barcode label, attached to the magazine front, see Figure 11-3. This label is necessary for the barcode feature and it is unique for each magazine.

Figure 11-3. TM and VMF30 magazine barcode label.

Section 1

This section contains feeder number codes in which also the magazine identity number is included. The number of codes should correspond to the number of feeders in the magazine, except for the VMF30 stick magazine that has a usable number of feeder barcodes on the label.

Old labels have only the feeder number in these barcodes.

Section 2

A magazine identity number that can be linked to a magazine name in TPSys.

Auxiliary Barcode Label

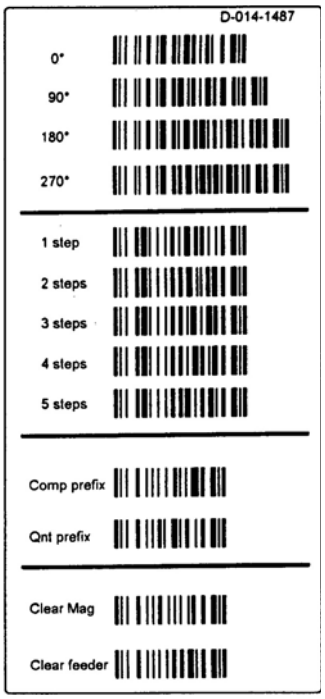

There is an auxiliary barcode label used for scanning parameters when loading magazines. This label is intended to be placed on the machine, or as near it as the barcode scanner can be used. The label is shown in the figure.

The following parameters are included in the label:

0°, 90°, 180°, 270°

Component angle in the magazine.

1 step ... 5 steps

Tape advancement per component, measured in mm (2 mm, 4 mm, 8 mm, 12 mm, 16 mm). For tape magazines only.

Comp prefix

Sets aside the component prefix requirement for scanning unprefixed manufacturer component barcode labels on for instance tape reels, plastic tubes, storage boxes and delivery notes.

Qnt prefix

Sets aside the quantity prefix requirement for scanning unprefixed manufacturer quantity barcode labels on for instance tape reels, plastic tubes and delivery notes.

Clear Mag

Clears all the feeders in the selected magazine. Not applicable to Agilis tape magazines with removable feeders.

Clear feeder

Clears selected feeder.

Linking TM and VMF30 Magazine Barcodes to Magazines in TPSys

A magazine barcode is linked to a TM or VMF30 magazine in TPSys as follows:

1. Place an appropriate magazine barcode label on the magazine.
2. Select *Magazine* > *Magazines* in the main menu.
3. Select the magazine with the new magazine barcode label.
4. Press <F2> to edit magazine data.
5. Scan the magazine identity barcode on the magazine barcode label.
6. Press <Esc> and confirm the modification.

There are different magazine barcode labels for different magazine types. Make sure the number of feeder barcodes on the label matches the number of feeders in the magazine.

Linking Component Barcodes to Components in TPSys

A component barcode is linked to a component in TPSys as follows:

1. Select *Edit* > *Components* in the main menu.
2. Select component in the list.
3. Press <Enter> to edit the component.
4. Scan the component identity barcode on the tape reel, plastic tube, storage box, delivery note, or elsewhere. The code does not have to be the same as in the *Name* field. Any unique code can be linked to the selected component.

   The component string is now shown in the *Barcode* field.

   If the manufacturer component code prefix is missing, then you can scan the *Comp prefix* code on the auxiliary barcode label, and then scan the component code again. All characters including the first one will be included in the component string.
5. Press <Esc> and confirm the modification.

Entering Magazine Data Using Barcodes

The scanning sequence described below is a complete barcode scanning. You can choose not to scan some of the items, and you can change the scanning order.

But, you must always start with the component code, and you must always finish with the feeder number.

Component code first – feeder number last!

For TM and VMF30 magazines with an old magazine barcode label, the magazine identity code has to be scanned last.

You can have any window open on the screen when scanning.

Component code

Scan the component identity barcode on the tape reel, plastic tube, storage box, delivery note, or elsewhere.

If the component code prefix is missing, then you can scan the *Comp prefix* code on the auxiliary barcode label, and then scan the component code again. All characters, including the first one, will be included in the string.

If the component code prefix is incorrect, it can be changed in a component prefix parameter. This is described in the *TPSys, Software Manual*.

Component batch number

Scan the component batch identity on the tape reel, plastic tube, storage box, delivery note, or elsewhere.

The batch identity will be inserted in the *Batch ID* field in the magazine feeder contents window, shown by pressing <Enter> in the *Magazines* window.

If the component batch number code prefix is incorrect, it can be changed in a component prefix parameter. This is described in the *TPSys, Software Manual*.

Quantity

Scan the component quantity on the tape reel, plastic tube, storage box, delivery note, or elsewhere.

If the quantity code prefix is missing, then you can scan the *Qnt prefix* code on the auxiliary barcode label, and then scan the quantity code again. All characters, including the first one, will be included in the code.

If the quantity code prefix is incorrect, it can be changed in a component prefix parameter. This is described in the *TPSys, Software Manual*.

Component angle

On the auxiliary barcode label, scan the barcode for the applicable angle, in which the component is oriented in the magazine.

The angle defined in the component list is the default angle. Normally, this is the correct setting, which makes this scanning not needed.

Tape advancement per component

Tape magazines only.

Select the required advancement length per component by scanning the appropriate barcode on the auxiliary barcode label.

The five steps represent the following advancement lengths: 2 mm, 4 mm, 8 mm, 12 mm, 16 mm.

The tape advancement defined in the component list is the default advancement. Normally, this is the correct setting, which makes this scanning not needed.

Feeder number

Agilis tape magazines only.

Enter the feeder number by scanning the barcode on the removable feeder. This action completes a component load scan sequence.

Agilis stick magazines only.

Enter the feeder number and pallet identity by scanning the barcode over the selected feeder. This action completes a component load scan sequence.

TM and VMF30 magazines only.

Enter the feeder number and magazine identity by scanning the barcode for the selected feeder on the magazine barcode label. This action completes a component load scan sequence.

If an old magazine barcode label is used, the magazine code has to be scanned after this code to complete a component load scan sequence.

If you do not scan the feeder number on an old magazine barcode label, the system selects the first unloaded feeder number.

Magazine code

This code is used to enter the magazine identity number.

TM and VMF30 magazines only.

If an old magazine barcode label is used, this code has to be scanned after the feeder number to complete a component load scan sequence.

Checking Magazine Feeder Data

Magazine feeder data can be checked by scanning the following items:

1. Component code.
2. Feeder number.
3. Magazine code (TM and VMF30 magazines with an old magazine barcode label only).

If the magazine feeder data in TPSys corresponds to the entered information, no message is displayed. If not, a message is displayed telling that the magazine feeder is occupied.

Clearing Magazine Feeder Data

Magazine feeder data can be cleared by scanning the following items:

1. The *Clear feeder* code on the auxiliary barcode label.
2. Feeder number.
3. Magazine code (TM and VMF30 magazines with an old magazine barcode label only).

Clearing All Feeder Data in a Magazine

This action is not applicable to Agilis tape magazines with removable feeders.

Feeder data for all feeders in a magazine can be cleared by scanning the following items:

1. The *Clear Mag* code on the auxiliary barcode label.
2. A feeder number (ASM stick magazines, and TM and VMF30 magazines with a new magazine barcode label only).
3. Magazine code (TM and VMF30 magazines with an old magazine barcode label only).

In an ASM stick magazine, all feeders in the magazine pallet are cleared.

Tray Position

A tray position, shown in the YWM, TWM and TEX tray windows and in the *Tray Positions* window, can be edited by using a hand held barcode scanner.

Enter a new tray position by scanning the following items:

1. The tray identity.
2. The pallet identity (trays on TEX pallets only).
3. Optional: The tray angle.

   Defines the orientation of the tray in the tray position. If no angle is entered, 0° will be used.
4. The tray position barcode for the machine.

For further information about tray positions, see Chapter 7.

Management Data

Management data, that is production information specific to a layout, is recorded by the system and can be printed out. It contains the following information, divided in two information groups:

Header information

Layout name
Station
Layouts assembled
PCBs assembled
Layout loaded time
Assembly time/PCB
Glue time/PCB

These entries contain information about the specified layout, such as name, in which machine it was produced, and number of layouts assembled.

Assembly information

Number placed

Number of successfully placed components.

Time(s)/ comp.

Time in seconds for each placed component.

Mechanical failures
Electrical failures
Other failures

Picked components that have not been successfully placed.

Consumption

Number of components that have been picked from the magazines.

Printing Management Data

Management data can be printed out either directly from the main menu or via the assembling menu. Both ways are described below.

From the main menu

1. Select *Print > Management Data*.
2. Choose management data to be printed out.

From the assembling menu

1. Select *Print Management Data*.
2. Press <Enter>.
3. Select management data to be printed out.

Clearing Management Data

Management data for the currently loaded layout can be cleared as follows:

– Select *Production* > *Clear Management Data* in the main menu.

Only management data for the currently loaded layout is cleared. If no layout is loaded, this command has no effect.

After clearing management data, new management data is logged and saved as soon as new assembling is launched for the layout.

Deleting Management Data

Management data for a not currently loaded layout can be deleted as follows:

1. Select *Utility* > *Delete Management Data* in the main menu.
2. Select layout.
3. Confirm the deletion.

After deleting the management data file, a new file is automatically created as soon as assembling is launched for the layout. New management data is then logged and saved.

This command is intended to be used when cleaning up the system.

TPSys Web Interface

A TPSys web interface is an add-on to the standard TPSys interface.

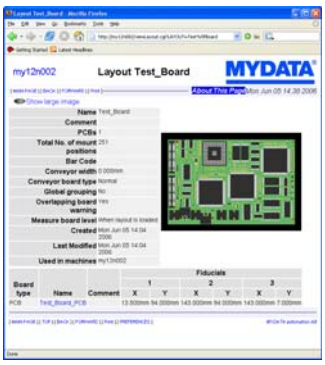

An example of a layout displayed in the TPSys web interface is shown in the figure to the left.

The TPSys web interface makes it possible to perform the following actions:

- View assembly data, such as package, component, layout, panel, and PCB data.
- View messages and light tower state.
- Monitor the machine performance.
- Monitor the machine utilization.
- Generate traceability reports.
- Generate error reports.
- Save system status.
- Configure printers.
- Print various TPSys reports.

Most of these actions are described below together with access and preference information.

Accessing the TPSys Web Interface

The TPSys web interface can be accessed in the following ways:

– Pressing <Alt> + <F2> on the machine keyboard.

– Entering the host name or IP address to the machine or data server in a PC browser. This assumes the machine is networked.

  Example: http://my100-14n01234

– Using MYPlan, which has a built-in web browser dedicated for the TPSys web interface.

Preferences

Some global and status display preferences can be set in the TPSys web interface, for instance language and measurement unit.

This is done by selecting *Set Preferences* in the web interface main menu.

Viewing Assembly Data

Selecting *Assembly data* in the TPSys web interface main menu gives you access to a set of viewers. These show data for packages, components, layouts, panels, and PCBs. Graphical images of data is also available.

For data such as PCBs, you also get inconsistency checks, for instance if a component refers to a package that does not exist in the system.

No editing of assembly data can be made in the TPSys web interface.

This part of the TPSys web interface is further detailed in the *TPSys, Programming Manual*.

Viewing Messages

Selecting *Assembly status* in the TPSys web interface main menu opens a window in which TPSys messages can be shown.

The light tower state can also be shown from this window.

Monitoring Machine Performance

Selecting *Management information > Performance Report Generator* in the TPSys web interface main menu opens a window in which data regarding the machine throughput can be configured and viewed.

Depending on the settings in the window, the information can include such as assembly time in seconds, the time spent on fiducial mark search time, or time waiting for boards. You can select a certain layout or all layouts, and the time period.

This data is extracted from the event log.

This feature is used to, for example, see if a layout runs faster or slower after a manipulation.

Monitoring Machine Utilization

Selecting *Management information* > *Machine Utilization Report Generator* in the TPSys web interface main menu opens a window in which data regarding the machine utilization can be displayed and configured.

The fields in the report are:

Period
: Selected time period.

Uptime
: The time TPSys has been used.

Active time
: The time a layout has been loaded in TPSys.

Runtime
: The time the machine has mounted components. Fiducial mark search time and board change time is not included. *Runtime* will therefore never be 100 % of *Active time*.

PCBs
: The number of produced PCBs (one row per PCB if *Show PCB list* was selected during configuration).

Parts
: The number of mounted components.

Generating Traceability Reports

Selecting *Management information* > *Traceability Report Generator* in the TPSys web interface main menu opens a window in which data from the event log can be displayed, configured, and saved.

Generating Error Reports

Selecting *Management information* > *Error Report Generator* in the TPSys web interface main menu opens a window in which data regarding pick errors and other assembly problems can be displayed and configured.

A report can be configured for a specific layout or for a given time period. It can be sorted in several ways, and the detail level can be chosen.

A report can either be displayed on the screen or saved to a file.

12. Daily Maintenance

This chapter informs about daily routine maintenance for the MY100 machine type. All other maintenance shall be performed by trained service personnel. Maintenance for service personnel is described in the service manual.

WARNING! Before commencing any maintenance, press the emergency stop button down or turn the power off.

Equipment Required

- Isopropyl alcohol.
- Lint-free cloths.
- Collecting container for rejected components.
- Vacuum cleaner or short-bristled brush.

Maintenance Steps

Daily maintenance is carried out by doing the cleaning and checking steps stated below.

Tool Bank

- Wipe off any solder paste and glue from all mount tool nozzles and glue tool tips carefully with a cloth slightly wet in alcohol. Be careful not to damage the springs in spring-loaded tools.
- Empty the reject bins.
- Carefully remove any small components that may have dropped into the tools in the HYDRA Speedmount ATE tool bank.

Be careful to put tools back in their original positions in the tool bank.

- Wipe off the tool bank with a cloth slightly wet in alcohol. Take extra care to wipe off tool verification points.

Glue Station, If Used

- Wipe off any excess glue from the glue station.

Component Handling Areas

- Remove loose components and pieces of component tape from the machine, from internal conveyors, from the TEX unit (if used), from the slot positions, and from magazines by using a vacuum cleaner or brush.
- Remove any components and component tape from the magazine connectors (Figure 12-1) by using a vacuum cleaner or brush.
- Inspect the magazine connectors. Report any damage to your service engineer.

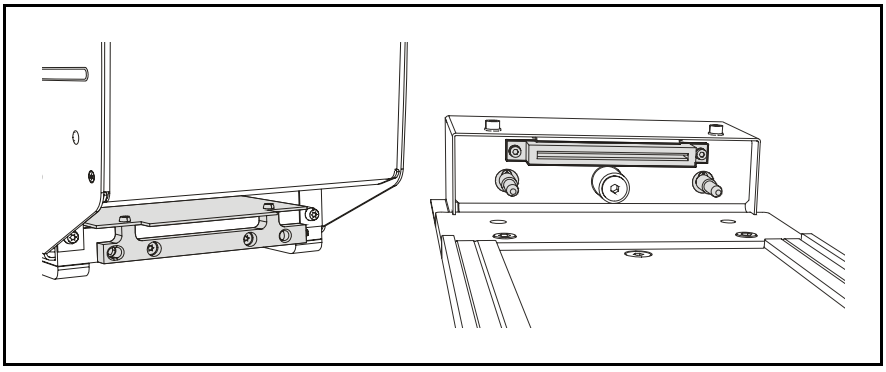

Figure 12-1. Magazine connectors.

Appendix A – Menu Reference Guide

The menu reference guide in this appendix contains descriptions of:

- Shortcuts
- Hot menu.
- Main menu.
- Switches

Shortcuts

System control

<F10>	Open the hot menu (see the next section).
<Alt> + <F1>	Switch to the TPSys online terminal, tty1.
<Alt> + <F*n*>	Switch to a virtual terminal (to access Linux and to log on TPSys offline). F*n* being <F2> to <F6> for terminal tty2 to tty6.
<Ctrl> + <Alt> + <F8>	Switch to console.
<Alt> +<F7>	Leave console.

Movement actions

<Ctrl> + Y	Move the Y wagon to the front or back position.
<Ctrl> + G	Grab board in conveyor.
<Ctrl> + R	Release board in conveyor.
<Ctrl> + S	Start stepper mode. If the access system is on, then the user must have high service access right to be able to start the stepper mode.

Camera views

<Shift> + <F1>	Show the last camera image.
<Ctrl> + T	Remove text from screen. This gives an undisturbed camera image. Reset by pressing <Esc>.
<Ctrl> + <Up arrow>	Pan the camera image. Select pan direction by using the corresponding arrow key.
<Ctrl> + <Shift> + <Up arrow>	Quickly pan the camera image. Select pan direction by using the corresponding arrow key.
<Ctrl> + <Page Down>	Zoom in.
<Ctrl> + <Page Up>	Zoom out.
<Ctrl> + <Home>	Reset to default zoom and panning.

Hot Menu

A hot menu containing the most usual options is opened by pressing <F10>.

All options in the menu shown below may not be included on the screen because some features are not installed or cannot be selected.

All options in the hot menu refer to main menu options or sub options. The following table shows where in the main menu the corresponding main menu options are found.

Hot menu options	Main menu	Page number
Reset Magazine Errors	Magazine	A-5
Load Layout	Production	A-3
Unload Layout	Production	A-3
Clear Layout Status	Production	A-3
Locate Feeder Positions	Magazine	A-5
Locate Boards	Production	A-3
Grab/Release Board	Production	A-3
Move Y Wagon Front/Back	Production	A-3
Leave Tool	Production	A-3
Magazines	Magazine	A-5
Y-Wagon Magazine	Magazine	A-5
Tray Wagon Magazine	Magazine	A-5
TEX Magazine	Magazine	A-5
TEX Units	Magazine	A-5
Components	Edit	A-7
Packages	Edit	A-7
Fiducial Marks	Edit	A-7
Parameters	Edit	A-7
Switches	Edit	A-7
Mount/Glue Switches	Edit	A-7
HYDRA Tool Utility	Utility	A-9
Select Unit	Utility	A-9
View Messages	Production	A-3
Set Message Time Mark	Production	A-3

Main Menu

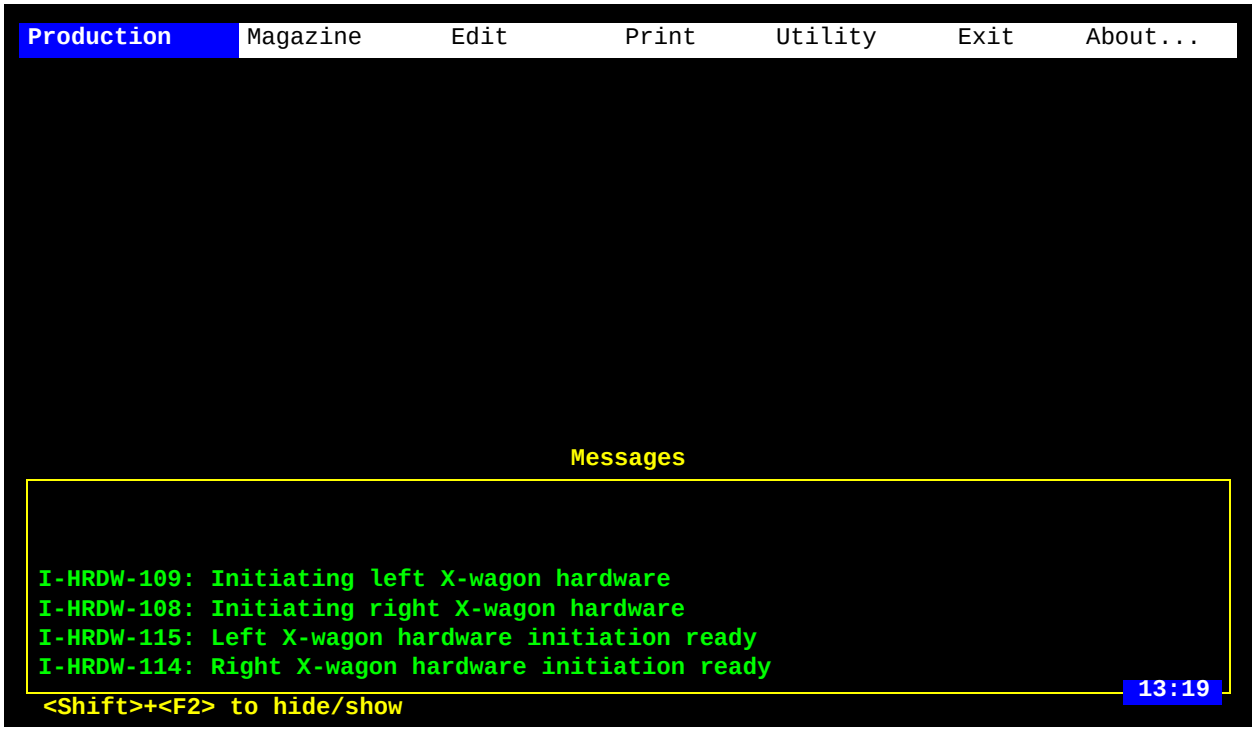

Figure A-1. The main menu in the TPSys main window.

Figure A-1 shows the main menu in the upper part of the TPSys main window. The main menu options are described below and on the following pages.

Production

Some of the options in this menu cause machine movements. Before entering such commands, check the following:

CAUTION! Ensure that there are no foreign objects on the assembly table, near the tool bank, or within the X wagon, Y wagon, or Tray Wagon Magazine moving areas, and that the single mount tool head and the HYDRA tools are in their upper positions.

Assemble

Assembling start command, which is followed by a dialog box for layout name, batch name, and quantity.

Causes machine movement. *Locate Boards (Automatically)*

Locates boards using automatic fiducial mark search.

Causes machine movement. *Locate Boards (Manually)*

Locates boards using manual fiducial mark search.

Clear Layout Status

Clears layout status for the currently loaded layout.

Clear Management Data

Clears management data for the currently loaded layout.

Load Layout

Shows a list of available layouts to be selected and loaded.

Edit Layout

If a layout is loaded, it is opened in the *Boards in Layout* window.

If no layout is loaded, then you can select a layout to edit.

Unload Layout

Unloads the currently loaded layout.

Layout Status

Opens *Layout Status* window.

View Messages

Enlarges the message box to a full screen size message window.

Set Message Time Mark

Sets a time stamp as a message line in the message log. This feature is intended for troubleshooting (to mark the time for a certain activity to be able to see if the problem remains after the time stamp).

Switches

Makes a number of production switches accessible.

Mount/Glue Switches

Makes global switches for component mounting and glue application accessible.

Causes machine movement. *Move Y Wagon*

Moves the Y wagon (and the Tray Wagon Magazine, if used) to the front or back position. Select position from the sub-menu shown.

Conveyor Control

Manual loading and unloading of boards from a conveyor. Select action from the menu.

– *Conveyor Load/Grab*
Loads a new board, adjusts the position (for automatic fiducial mark search), and grabs the board.

– *Conveyor Release & Unload*
Releases the board and moves it out of the machine.

– *Set Conveyor Width*
This feature affects only the Y-wagon conveyor on the machine. Surrounding conveyor system is not affected. The feature is used to:

Read off the current conveyor width, which is shown after selecting this menu option. If a layout is loaded, the board width is shown (zero is shown for a board which has no board size set).

Set the conveyor width by typing the conveyor width in the dialog box and confirming it. The conveyor will change to the new width after emptying present boards, if not empty. You can also press <F1> and set the width by using the trackball.

The *92.0031 Flags; Automatic width* parameter must be set to *Yes* to make this feature available.

Causes machine movement. *Leave Tool*

Current tool is placed in the tool bank after confirming a tool leave.

Magazine

Some of the options in this menu cause machine movements. Before entering such commands, check the following:

CAUTION! Ensure that there are no foreign objects on the assembly table, near the tool bank, or within the X wagon, Y wagon, or Tray Wagon Magazine moving areas, and that the single mount tool head and the HYDRA tools are in their upper positions.

Causes machine movement.

Locate Feeder Positions

In order to locate tape and stick magazine feeder pick positions, this option makes it possible to center the cross hairs on the component pick positions by using the trackball.

Magazines

Opens the *Magazines* window for tape and stick magazines.

Causes machine movement.

Locate All Magazines

This option locates magazine fiducial marks automatically. If the automatic magazine fiducial mark search fails, then you can locate magazine fiducial marks manually by using the trackball.

TM and TM Flex magazines are provided with a fiducial mark sticker. This consists of a black sticker with a white line and it is attached on the left side of the magazine frame, in the pick line.

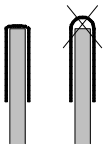

Press the sticker down properly when attaching it.

If you use stick magazines, you can attach fiducial mark stickers (see the figure) to get full advantage of the automatic location feature.

The fiducial mark sticker part number is D-014-0819.

Agilis magazines have round drilled marks.

Removable Feeders

Opens the *Removable Feeders* window.

Reset Magazine Errors

Clears magazine errors for all magazines.

Tray Types

Opens the *Tray Types* window.

Y-Wagon Magazine

Opens a sub-menu with the following options:

- *Trays*
  Opens the *YWM Trays* window, used for trays placed on the assembly table.
- *Tray Positions*
  Opens the *YWM Tray Positions* window, used for trays placed on the assembly table.

Tray Wagon Magazine

Opens a sub-menu with the following options:

- *Trays*
  Opens the *TWM Trays* window, used for trays placed on the Tray Wagon Magazine.
- *Tray Positions*
  Opens the *TWM Tray Positions* window, used for trays placed on the Tray Wagon Magazine.

TEX Magazine

Opens a sub-menu with the following options:

- *Trays*
  Opens the *TEX Trays* window, used for trays placed on pallets in the TEX Tray Exchanger.
- *Tray Positions*
  Opens the *TEX Tray Positions* window, used for trays placed on pallets in the TEX Tray Exchanger.
- *TEX Pallets*
  Opens the *TEX Pallets* window, used for pallets in the TEX Tray Exchanger.

Magazine Kits

Opens the *Magazine Kits* window that contains all magazine kits stored in the system.

Create Magazine Kit

Creates a magazine kit for the currently loaded layout.

Edit

Components
Opens the *Components* window.

Packages
Opens the *Packages* window.

Layouts
Opens the *Layouts* window.

Panels
Opens the *Panels* window.

PCBs
Opens the *PCBs* window.

Parameters
Opens the *Parameters* window.

Fiducial Marks
Opens the *Fiducial Marks* window.

Glue Dots
Opens the *Glue Dots* window.

Users
Opens the *Users* window.

Print

Component

Selected component data or the complete component list can be printed out.

Package

Selected package data or the complete package list can be printed out.

Magazine

Selected magazine contents or the complete magazine list can be printed out.

PCB

Data for a selected PCB or all PCBs can be printed out.

Components In Layout

A component list for the selected layout is printed out.

Messages

All messages or those with a maximum age of what is stated as *Enter time in minutes* can be printed out or saved as a file.

Parameters

Selected parameter or all parameters can be printed out.

Management Data

Management data for the selected layout is printed out.

Magazine Optimization

Creates and prints a list of possible magazine combinations for the selected layout.

Magazine Kit

Selected magazine kit or all magazine kits can be printed out.

Layout Preparation

Creates and prints out a list of components that cannot be mounted in the loaded layout.

Removable Feeder

Data for a selected feeder or all feeders can be printed out.

Cancel All Printouts

This option cancels all current print processes.

Utility

Some of the options in this menu cause machine movements. Before entering such commands, check the following:

CAUTION! Ensure that there are no foreign objects on the assembly table, near the tool bank, or within the X wagon, Y wagon, or Tray Wagon Magazine moving areas, and that the single mount tool head and the HYDRA tools are in their upper positions.

Import

Import command for TPSys and Directline format data, such as layout, panel, PCB, component, fiducial mark, and package.

Export

Export command for TPSys and Directline format data, such as layout, panel, PCB, component, fiducial mark, and package.

Causes machine movement.

Installation and Calibration

Software installation tools for adjusting and calibrating various functions.

Opens a sub-menu with the following options:

- *Tray Wagon Installation/Removal*
  Installs and uninstalls the Tray Wagon Magazine.
- *TEX Installation/Removal*

  Installs and uninstalls the TEX Tray Exchanger.
- All other options in this menu.
  All the other options in this menu are detailed in the service manual.

Causes machine movement.

Diagnostics

Software diagnostic tools for various functions.

Opens a sub-menu with the following options:

- *Toggle X-Wagon Position*
  Moves the X wagon to the outermost positions.
- All other options in this menu.
  All the other options in this menu are detailed in the service manual.

Causes machine movement.

Re-Initiate Motor Controllers

Initiates the motor controllers and hardware without exiting TPSys. The procedure should be performed if you suspect any trend of measuring error or abnormal movements.

Causes conveyor movement.

Re-Initiate Conveyor

Initiates the Y-wagon conveyor.The procedure should be performed if you suspect any trend of measuring error or abnormal movements.

CAUTION! Do not re-initiate the conveyor width if any board is left in the placement area.

Conveyor Pass-Through Mode

Sets the machine in a pass-through mode so that boards can pass through the machine without being assembled. This option is intended for in-line machines temporarily not used.

User Access System

Switches the security feature on or off. This feature can only be switched on or off by a user for which the user privilege level is high.

Web Interface Setup

Used to select security level in the web interface setup.

Clear Event Log

Clears all data in the event log for a selected machine.

The event log is a database where system events (for instance start/stop, logon/logoff, magazine insertion/removal, components mounted, and errors) are stored. By using the TPSys *Export* feature this database can be used for evaluation of management and quality data outside TPSys.

Delete Management Data

Deletes the management data for a selected layout.

This command is intended to be used when cleaning up the system. If you want to clear the management data for the currently loaded layout only, use the *Clear Management Data* option in the *Production* menu instead.

Backup

A feature for backing up most of the data stored in the TPSys databases.

Restore

Restore is used for restoring data backed up with the previous feature.

Schedule Backup

Opens a dialog box in which scheduled automatic backup can be set.

Save System Status

Saves numerous status parameters and settings, which can be interpreted by MYDATA technicians only. The function is intended for fault tracing and the command should be given immediately after a fault has occurred. The result can then be sent to MYDATA for evaluation.

Format DOS Diskette

DOS formats a disk in the machine disk drive.

Units

The measuring units can be selected to *Metric* or *Inch*.

Language

You can select language from a menu. After changing to another language, TPSys is exited and restarted.

Desktop Resolution

Opens a dialog box in which you can select desktop resolution for a server. The choices are *Standard resolution* and *High resolution*. The machines always use a high resolution.

Exit

Shutdown

System shutdown is selected prior to switching off the power. When this option is selected, you exit both the MYDATA TPSys and Linux. After receiving the following message you can safely switch the power off:

```
System halted
```

The system can now be re-booted by pressing the key combination <Ctrl> + <Alt> + <Del>.

Restart TPSys

TPSys is shut down and restarted again.

Exit TPSys

TPSys is shut down and the Linux prompt is shown. To restart TPSys, type ’go’ and press <Enter> at the Linux prompt.

Exit To Service

TPSys is shut down and the service program is started.

The service program is described in the service manual.

Log Off

The current user is logged off.

About...

This Machine

Shows the machine name and number, and available options.

TPSys

Shows TPSys version and revision information.

Databases

Opens a menu for selecting status or size.

- *Status* shows database status, that is local or shared databases.
- *Size* shows the database size for all databases, that is the number of entries in the databases.

System Statistics

Shows system statistics. Data shown is dependent on if the machine is equipped with a HYDRA system or not.

Temporary Statistics

Shows also system statistics, but this statistics can be reset by using the *Reset* command in online mode. This feature is intended for temporary statistics. Data shown is dependent on if the machine is equipped with a HYDRA system or not.

Motor Controllers

Shows the motor controller software versions.

Switches

There are three groups of production switches that can be accessed by selecting *Production* > *Switches*.

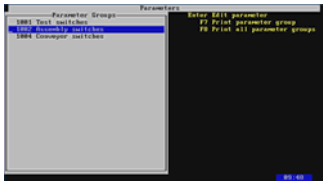

The three groups are shown in a *Parameters* window, see the miniature figure to the left.

The groups are:

- *1001 Test switches*
- *1002 Assembly switches*
- *1004 Conveyor switches*

Select group by using the arrow keys.

By pressing <F7> you can print out the selected switch group.

By pressing <F8> you can print out all the switch groups.

Modifying a switch setting

Press <Enter> to access a switch in the selected switch group.

All the switches included in the switch group are shown in a box.

You can modify a switch setting as follows:

- Select switch by using the arrow keys.
- Select setting by pressing <Space> or by typing a value.

  Maximum and minimum values are shown in the information field for those entries where values are required.
- Select *Save and exit* and press <Enter>.

  Password may be required to save modifications.

The switches included in the three switch groups are described below, in the same order as shown in the box.

1001 Test switches

0003 Mechanical test

Yes – Components that are mounted with Midas, and have the *Verify mechanical* entry set to *Yes* in the *Packages* window, are verified mechanically.

No – No components are verified mechanically.

0004 Test of Z level when place

Yes – A plausibility check of the height level is performed and the actual placement height is compared to the package *Overall height* level in the *Packages* window. This comparison also considers the *21.0305 Place; Place level tolerance* parameter to compensate the height of solder paste under the component.

This feature detects if a component was never picked up from the magazine, has dropped from the mount tool, or was placed on top of another component.

No – The height level is not measured when placing components.

0005 Test of Z level when pick

Yes – The same function as the previous switch, but in this case it is checked if the component pick from magazine feeder or tray is done within the height limits. The limits are set by the package *Overall height* entry in the *Packages* window and the *21.0105 Pick; Pick level tolerance* parameter.

This feature detects if a component, for instance, is missed in the magazine.

No – The height level is not measured when picking components.

0006 Test of vacuum

Yes – The vacuum in the mount tool is checked to confirm that a component is held by the tool. This applies to all components except those for which the *Vacuum test* is set to *No* in the *Packages* window.

No – No vacuum test is performed.

Electrical Test

0001 Test

Yes – Electrical verification is performed on components for which electrical verification is defined in the component list. It is also required that:

1. There is a centering phase defined in the package list with the same angle as in the test, specified in the component list.
2. The component has *Electrical test* set to *Yes* in the component list.

No – No components are verified electrically.

0008 Perform test after magazine inserted

Yes – If a magazine is removed and then inserted again, the counter used by the *0002 Number of successful tests before HYDRA* test switch is reset. This counter sets how many components to be tested with the standard mount tool, before HYDRA mounting is started.

No – If a magazine is removed and then inserted again, the counter used by the *0002 Number of successful tests before HYDRA* test switch is not reset but continues to count. If a sufficient number of components already had been tested by the standard mount tool before the magazine was removed, then the HYDRA mounting will continue immediately as soon as the magazine is inserted again.

0002 Number of successful tests before HYDRA

Defines a number of HYDRA mountable components which will be picked with the standard mount tool, tested with the centering jaws, and mounted on the board before the HYDRA unit continues mounting the components.

The number applies to each magazine feeder that holds HYDRA mountable components. If, for example, there are 16 feeders that hold HYDRA mountable components and this parameter is set to 2, then 32 components will be tested and mounted with the single mount tool before the HYDRA starts mounting components.

This parameter affects HYDRA mountable components only. That is components for which a tool and a HYDRA optical centering phase are specified in the package list.

0020 Measure component after test

Yes – After passing the electrical verification, a new electrical measurement is performed on the component and the measured value from this measurement is stored in the event log.

This feature requires also that:

1. The *Save electric value* entry in the *PCB Items* window is set to *Yes*.
2. The *191.0024 Options; Electrical measurement* parameter in the *191 Options* parameter group is set to *Yes*.
3. The magic word includes this optional feature.

No – No electrical measurement of the component is performed.

0007 Lamp timeout

Sets the camera light idle time when, for instance, centering fiducial marks and positioning components. If the machine is left during such a procedure, the light is switched off after the time set. Pressing a key on the keyboard or moving the trackball turns it on again.

The time unit is seconds.

1002 Assembly switches

Present Board Detection

0014 Automatic

Automatic non-present board marking.

The *0013 Remember non-present board flags* switch should be set to *No* if the *0014 Automatic* switch is set to *Yes*.

0013 Remember non-present board flags

Sets whether non-present board marks remain or are cleared after mounting.

Locate Boards

0003 Automatic fiducial mark search

Yes – Automatic fiducial mark search is on.

No – Automatic fiducial mark search is off.

Serial Start

0006 Mode

Automatic start mode is intended for systems equipped with in-line conveyor and barcode scanner or other detection device.

Off

Automatic start mode is off.

Latest read

The latest layout name, read from the defined serial port, is loaded and assembled (no queuing).

FIFO

Queues up layout names in the order they are read from the defined serial port. As the boards are transported into the machine, the layouts are loaded and assembled in the queue order.

0029 Wait for board available before layout name

Yes – TPSys will wait to read the next layout from the serial link until there is a board available on the incoming conveyor.

No – TPSys will not wait to read the next layout from the serial link until there is a board available on the incoming conveyor.

0023 Wait for layout name before load

Yes – If serial start is used (that is the *0006 Mode* switch is set to *Latest read* or *FIFO*), TPSys will wait to load the next board until it has got the next layout name from the serial link.

No – TPSys will not wait to load the next board until it has got the next layout name from the serial link.

PCB ID

PCB ID is used for tracing components from a feeder to a PCB. The *PCB ID* is written into the event log in a PCB identity entry.

0024 Auto mode

Sets whether the *PCB ID* is taken from the serial line or not.

Off

The *PCB ID* is not taken from the serial line.

Latest read, serial line

The most recent *PCB ID* is taken from the serial line.

FIFO, serial line

PCB ID is taken from the serial line in the order they appear, that is the oldest first.

0025 Accept manual

If switch *0024 Auto mode* is set to *Off*, then a dialog box is shown asking for the *PCB ID* for each PCB.

Yes – The *PCB ID* can be entered manually by typing it, or by using the hand-held barcode scanner.

No – The *PCB ID* cannot be entered manually.

0027 Auto-generate on panels

Yes – The system accepts only one identity code per panel. From this identity code it generates identities for all PCBs in the panel. The syntax of the generated identity codes is panelId_boardNo where boardNo is the board number in the panel.

No – The system does not generate identities for the PCBs in the panel.

Warning Switches

0019 Min component distance in PCB editor

If the center-to-center distance between two components, which are to be placed on a PCB, is below what is specified by this switch, then a warning is shown.

0041 Number of layouts for component shortage warning

Sets the number of remaining layouts to produce, a component shortage warning shall be displayed. Only used when you have an indefinite batch size.

0042 Display component shortage warnings

Turns component shortage warnings on or off.

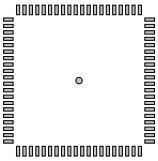

Assemble

0004 Use local fiducial marks

Yes – Local fiducial mark search is performed automatically for components prior to placing, provided the *Local fiducial marks* entry in the *PCB Items* window is set to 1, 2, or 3.

No – Local fiducial mark search is off.

0005 Invert meaning of component mount/glue flags

Yes – Only components for which the *Mount* entry is set to *No* in the *Components* window are mounted. This switch inverts thus the function of the *Mount* field in the *Components* window.

No – Components for which the *Mount* entry is set to *No* in the *Components* window are not mounted.

Image Log

0030 Image log mode

Saves images that can be viewed in the TPSys web interface. From a window with thumbnails you can select image to display. Clicking a thumbnail will expand the image. Images can be saved or deleted. Saved images will be stored as zip files. In these zip files information such as package and fiducial mark definitions, camera calibration data, and camera parameters are also included.

It is possible to toggle a graphic overlay in the view.

The image log is only available for users with high access rights.

0032 View mode

For troubleshooting, it is possible to see camera images during pre-pick inspection of trays by setting this parameter to *Yes*.

Enabling this switch considerably decreases the mounting speed.

More information is found in Chapter 7.

HYDRA Status

0031 HYDRA unit

Disables or enables the HYDRA unit. If the HYDRA unit is disabled but present in the machine, an alert is shown.

0033 HYDRA tool tube 1 – 0040 HYDRA tool tube 8

Disables or enables HYDRA tools. One switch per tool.

HYDRA Status for left X wagon

0051 HYDRA unit

Disables or enables the left HYDRA unit. If the HYDRA unit is disabled but present in the machine, an alert is shown.

0053 HYDRA tool tube 1 – 0060 HYDRA tool tube 8

Disables or enables HYDRA tools. One switch per tool.

1004 Conveyor switches

0001 Conveyor fetch

Yes – New boards are fetched automatically by the conveyor.

No – Boards are not fetched by the conveyor.

0002 Conveyor leave

Yes – Boards are carried away automatically by the conveyor.

No – Boards are not removed by the conveyor.

Appendix B – About the Documentation

The documentation of the MYDATA component placement machines comprises the following parts:

- Operator's manual.
- Programming manual.
- Service manual.
- Software manual.
- Spare parts catalog.

The document structure in Figure B-1 shows the intended user for each document.

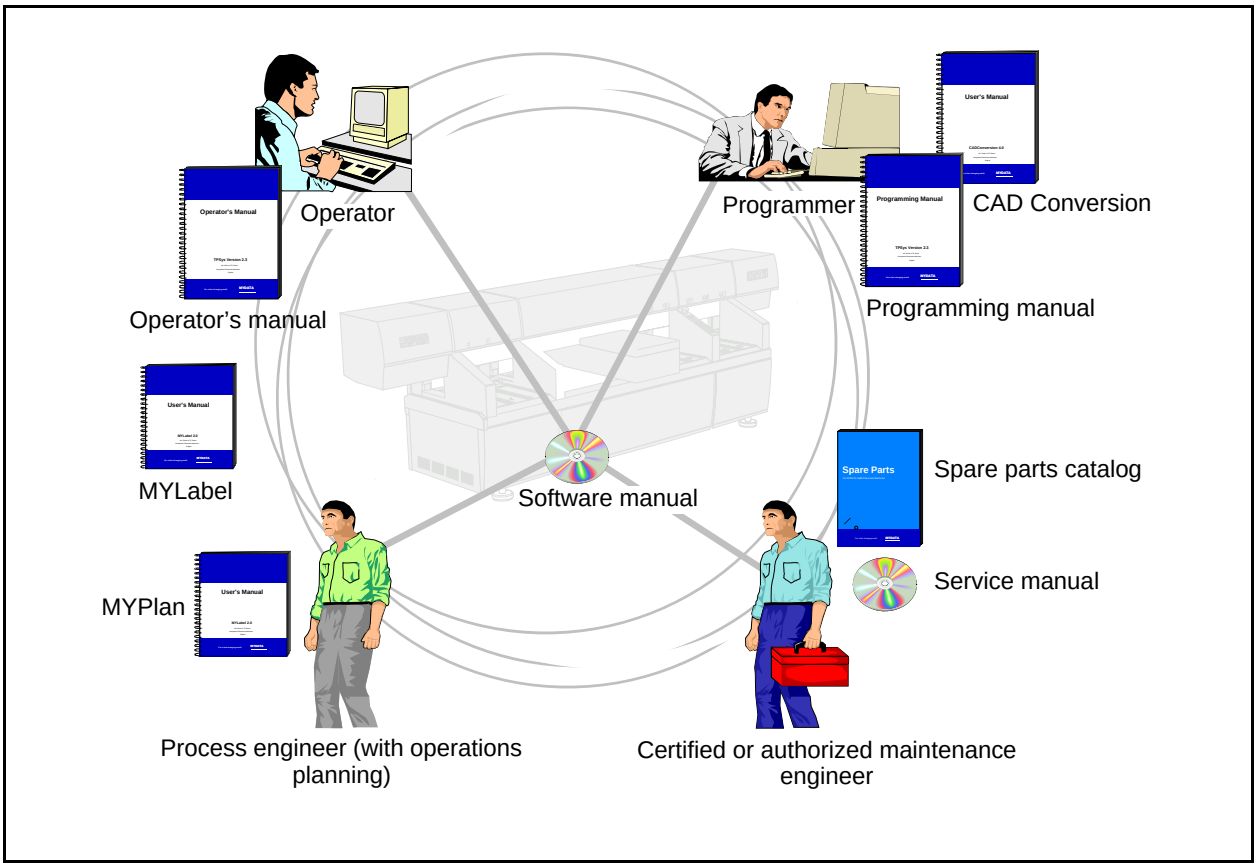

Figure B-1. Document structure.

These documents and some supplementary software products are described on the following pages.

Operator's Manual

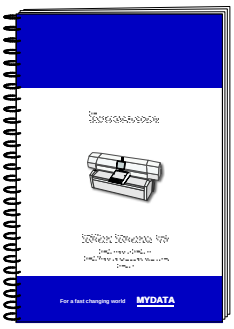

An operator’s manual is available for the MY100 type of MYDATA pick and place machines.

This manual is provided with each machine.

The operator’s manual is available in the same languages as the TPSys software.

The operator’s manual contains information to assist the operator to start and operate the system, load components and handle magazines and trays.

Information about safety, daily maintenance, HYDRA, TEX, and Tray Wagon Magazine operation is also included in the operator's manual.

Programming Manual

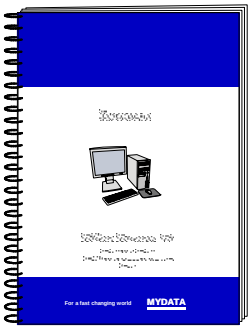

A programming manual is available for TPSys version 2.6 that covers all MYDATA pick and place machine types running TPSys version 2.6.

This manual is provided with each machine.

The programming manual is not available in the same languages as the TPSys software, but in the majority of these languages.

The programming manual contains basic information about the machine movements, such as coordinates, fiducial marks, angles, centering, verification, how to program boards, create mount lists, and complete component and package lists.

Information about pre-programmed packages, HYDRA, TEX, and Tray Wagon Magazine programming is also included in the programming manual.

Service Manual

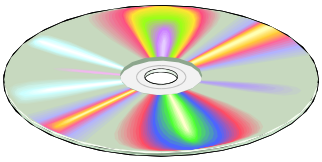

A service manual is available for the MY100 type of MYDATA pick and place machines.

This manual is provided with each machine.

The service manual is available on a CD in English only. A hard copy can be ordered from MYDATA.

The service manual contains descriptions, service instructions, and calibration guidelines for the machine.

Information about safety, maintenance, and common optional devices and systems are also included in the service manual.

Software Manual

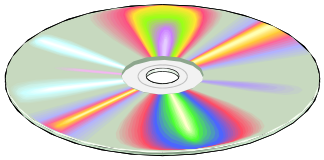

A software manual is available for TPSys version 2.6 that covers all MYDATA pick and place machines running TPSys version 2.6.

This manual is provided with each machine.

The software manual is available on a CD in English and Japanese. A hard copy can be ordered from MYDATA.

The software manual contains a system overview, Linux description, import/ export information, back up/restore instructions, and network communication.

The software manual contains also a message reference guide, containing TPSys messages with descriptions.

Spare Parts Catalog

A spare parts catalog, containing information, figures and part numbers on the most common spare and consumable parts, is available from MYDATA.

The spare parts catalog is available in English only.

Supplementary Software

MYDATA provides supplementary software that facilitates the programming work in TPSys.

This software may be mentioned somewhere in this manual but it will not be described here. Refer to the manual for the respective product.

CAD Conversion

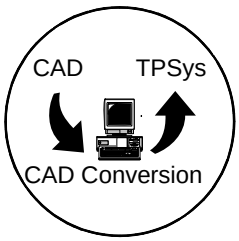

CAD Conversion is a software package used to convert CAD files containing placement data to TPSys in order to use the data for component placing.

The CAD Conversion software package includes a comprehensive *CADConversion, User's Manual*.

MYPlan

MYPlan is a Windows-based software developed for scheduling board assemblies in MYDATA placement machines. The purpose of the software is to provide the operator with appropriate loading instructions to increase the placement machine performance. MYPlan calculates the best possible solution to place the components under certain circumstances.

The MYPlan software package includes a comprehensive *MYPlan, User's Manual*.

MYLabel

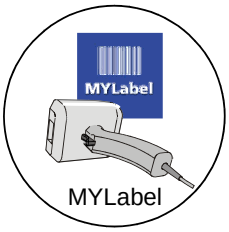

MYLabel keeps track of component carriers (tapes, sticks) used in production by using barcodes. MYLabel uses an identification barcode linked to a database with component names, quantities, and batch information. The database also contains component information, such as stock location and owner.

The MYLabel software package includes a comprehensive *MYLabel, User's Manual*.

Index

A

B

C

D

E

F

G

H

I

J

L

M

P

R

S

T

V

W

X

Y

Z

MYDATA® automation WORLDWIDE

SWEDEN
MYDATA automation AB
Adolfsbergsvägen 11
168 66 Bromma
Sweden
Tel: +46 8 475 55 00
Fax: +46 8 475 55 01

USA
MYDATA automation, Inc.
320 Newburyport Turnpike
Rowley MA 01969-2002
USA
Tel: +1 978 948 6919
Fax: +1 978 948 6915

UK
MYDATA automation Ltd.
14 Wessex Trade Centre
Ringwood Road
Poole BH12 3PQ
England
Tel: +44 1202 723 585
Fax: +44 1202 723 269

BENELUX
MYDATA automation B.V.
Schakelplein 10
5651 GR Eindhoven
Netherlands
Tel: +31 40 262 06 67
Fax: +31 40 262 06 68

FRANCE
MYDATA automation S.A.
13 Rue de Norvège BP122
91944 Courtaboeuf Cedex
France
Tel: +33 1 69 59 24 34
Fax: +33 1 69 28 71 00

JAPAN
MYDATA automation K.K.
Okura bldg., No. 3, 1st floor
2-17-7, Nihonbashi Kayabacho,
Chuo-ku, Tokyo 103-0025
Japan
Tel: +81 3 3661 7714
Fax: +81 3 3661 7715

CHINA
MYDATA automation Pte Ltd.
Block 4, No. 700 Gui Ping Road,
Cao He Jing Hi-Tech Park,
Shanghai 200233, China
Tel: +86 21 6485 5389

MYDATA automation Pte Ltd.
Shop 206, Dong Po House,
Yee Hong Road, Yan Tain
Industrial Area,
Fenggang town, Dongguan,
Guangdong, China
Tel: +86 769 7567 313

SINGAPORE
MYDATA Asia Pte Ltd.
Asiawide Industrial Building
5 Pereira Road, #01-01
Singapore 368 025
Tel: +65 6281 7997
Fax: +65 6281 7667

www.mydata.com
info@mydata.se