Fuji Scalable Placement Platform

NXT

Setup Manual

NXT

QD002-07

FUJI® Machine Mfg.Co.,Ltd.

Consult Fuji beforehand if you are considering selling this equipment to a third party after it has been installed.

Fuji Scalable Placement Platform

NXT

Setup Manual

The manuals listed below are shipped with the NXT machine.

NXT Setup Manual

NXT System Reference

NXT Mechanical Reference

FUJI Intelligent Feeder Manual

NXT Programming Manual

In order to operate this machine in the safest and most efficient manner, please read the provided manuals thoroughly and observe all instructions and warnings.

Keep these manuals in an accessible location near the machine.

QD002-07

FUJI® Machine Mfg.Co.,Ltd.

Copyrights

Trademark Rights

Warranty and Liability

Fuji Machine Manufacturing Co., Ltd. accepts no responsibility for situations that may arise due to any of the following:

- The use of third party parts.
- The use of non-genuine Fuji parts.
- Incorrect settings made by the customer.
- Improper use of Fuji equipment.

Notice

Fuji Machine Manufacturing Co., Ltd. reserves the right to change the content of this manual without notice.

Every effort has been made to ensure that this manual is correct in every detail. However, please contact Fuji in the unlikely event that errors or omissions are detected.

Fuji Machine Manufacturing Co., Ltd. accepts no liability whatsoever for damages that may arise as a result of this manual, with the exception of problems that originate in our products.

Contents

MEMO:

1. Safety Guideline

Fuji machines are designed and produced with safety as one of our main considerations. However, even a perfectly designed machine can be damaged, or someone can still be injured if the user does not follow the safety rules. It is the responsibility of the user to make sure all safety rules are followed during operation and maintenance.
Be sure to read these safety rules before operating the machine. Keep this manual close at hand when operating the machine.

1.1 About Symbols

To avoid injury to persons and damage to the machine, Fuji employs a number of messages and symbols that are used in manuals and on the machines. Be sure you understand the meanings of these symbols before reading the manual.

1.1.1 Degree of Hazards

Symbol	Definition
⚠ DANGER	Failure to observe this hazard warning will lead to severe injury or death.
⚠ WARNING	Failure to observe this hazard warning may lead to severe injury or death.
⚠ CAUTION	Failure to observe this hazard warning may lead to personal injury or damage to the machine.

1.1.2 Examples of the Symbols

Symbol	Explanation
	Hazard A triangle is used to draw your attention to a hazard. The symbol inside the triangle indicates the nature of the hazard (in this case, electrical shock).
	Prohibition A circle with a diagonal line is used to draw your attention to an operation that is prohibited. The symbol inside the circle indicates the nature of the operation (in this case, disassembly).
	A circle with an exclamation mark is used to draw your attention to to a mandatory action. In other words, you are required to carefully carry out the given instructions.

1.2 Safety Rules for All Machine Types

⚠DANGER

Do not approach moving parts during automatic or manual operation

- Do not place hands or other body parts inside the machine during automatic operation or positioning. Body parts or clothing may be caught in the machine causing personal injury.

⚠WARNING

Do not insert hands or other body parts into the conveyor inlets

- Body parts may get caught in the machine resulting in injury.
- If using a single machine independently, install safety covers or interlock sensors at the conveyor openings, in accordance with your local safety regulations, to prevent injuries at the conveyor.

Do not operate the machine with the safety covers or doors open

- When safety covers or doors are removed, body parts or clothing may be caught in the machine causing personal injury.
- When maintenance works are completed, return the safety covers and doors to their original (closed) position.

Always verify the position of the EMERGENCY STOP buttons before operating the machine

- Always be aware of the positions of the EMERGENCY STOP buttons so that they can be pressed quickly in case of an emergency.

Check the safety functions before starting operation

- Before starting the machine check the operation of the EMERGENCY STOP button, the safety switches on the covers, doors and all other machine safety features.
- Contact a Fuji serviceman immediately if any of the safety functions fails.

Do not remove safety switches or disarm the safety functions

- Do not short or remove the machine's safety switches. Persons working on the machine may be seriously injured if operation commands are issued by mistake.

⚠WARNING

Check that there is nobody inside the machine when working on the machine with two persons or more

- Verify that nobody is within or near the machine before operating the machine. Operating the machine may cause injury to the person who is carrying out maintenance.

Do not approach a machine that has stopped moving

- There are times during automatic operation when the machine may appear to have stopped while it is waiting for a board, waiting for the next machine, reading marks, transmitting data, etc. In such cases, once certain conditions are fulfilled, the machine will begin moving again automatically, so care should be taken. Only approach the machine after the EMERGENCY STOP button has been pressed.
- When the message "Ready" displays at the machine display, the machine will begin to move once certain conditions are satisfied. Keep in mind that the machine will begin to move regardless of whether these conditions are satisfied intentionally or inadvertently.

Do not place hands near the main conveyor

- Hands or other body parts may be caught in the machine.

Always perform maintenance work after turning OFF the machine power supply.

- Failure to observe this may result in sudden machine movements or electric shock, and is therefore extremely dangerous.

Do not insert or remove connectors while power is being supplied to the machine

- Removing or inserting connectors while power is supplied to the machine may not only cause damage to the machine, but may also cause electrical shock.

Stay clear from the machine when it is being lifted

- Never put hands or feet under the machine when the machine is being raised by means of a jack or other device for leveling or transport.

⚠WARNING

Do not wear gloves made of cloth when operating the machine

- Rubber gloves will tear when caught by the machine and prevent hands from being drawn into the machine. Gloves made of cotton or similarly strong material may cause hands to be drawn into the machine.

Long hair should be tied back

- Long hair may get caught in running machines.
  Hair should be kept short or tied back so that it does not get caught in the machine.

Turn off the air supply when carrying out maintenance on cylinders, valves, and filters

- Removing cylinders, valves, or filters without turning the air supply off, may cause parts or particles to be propelled into the eyes.
- Be sure to turn off the air supply when carrying out maintenance on cylinders, valves, and filters.

Be sure to wear protective glasses when removing parts from the machine

- Be sure to wear protective glasses when removing or disassembling parts.

Check the machine monitor and the target axes while manually operating the machine

- When operating the machine, carefully follow the instructions that are displayed at the machine display.
- Operating the machine without looking at the machine display may lead to operating errors or result in damage to the machine or products.

Do not touch the servo amp power terminal for at least five minutes after turning off the power

- The servo amp retains a high voltage even after the power has been turned off.
- Always wait at least five minutes, and ensure that the CHARGE lamp is off, before undertaking any work that may result in contact with the servo amp terminal.

⚠CAUTION

Do not operate the machine after removing or disabling sensors

- Removing or disabling sensors will disarm the interlock, leading to collisions and damage to the machine.

Confirm the operational status at the machine messages for machines that support automatic changeover

- On machines equipped with an automatic changeover system, it is difficult to ascertain the changeover status from the front of the machine during operation in production mode. Follow the instructions that display at the machine monitor

Ensure to use the handle when opening or closing the safety doors, fences or covers

- Opening or closing the safety doors, fences or covers without using the handle may result in injury to the hand.
- Opening or closing the safety doors, fences or covers with force, without using the handle may result in damage to the machine.

1.3 Safety Rules for NXT

1.3.1 Main Unit

⚠WARNING

Do not insert hands or other body parts into the machine in the area between feeders especially when there are only a few feeders present on the feeder pallet.

- Failure to do so could result in injury due to contact with the body part and the head during movement.

When changing the conveyor width with the module retracted, do not insert hands in the area near the conveyor

- Fingers may be pinced or caught in the movable conveyor rail, resulting in serious injury.

When mounting the MCU, ensure that no one is between the MCU and machine base

- A person could be crushed to death if caught between the MCU and base.

When pushing a module onto the base, check that no one is behind the module

- A person could be crushed between the base and module, resulting in serious injury.

When pushing in a module, do not insert hands between the module cover support and module

- Fingers may be pinced or caught, resulting in serious injury.

When pushing in a module, do not insert hands between the module lower front cover and base

- Fingers may be pinced or caught, resulting in serious injury.

When pulling out or pushing in a module, do not insert hands or other body parts in between modules

- If caught between modules, fingers or other body parts could be cut or severed.

When working on the module in an opening with the cover off, ensure that no one pushes or pulls out in the module

- The module may punch, sever, or cause serious injury.

⚠WARNING

When working on the base in the opening above the waste tape box, ensure that no one pulls out a module

- The module may pinch, sever, or cause serious injury.

When working on the base in an opening with the cover off, ensure that no one pushes or pulls out in the module

- The module may pinch, sever, or cause serious injury.

Do not rotate the module lock knob to [UNLOCK] when a module is loaded on the MCU.

- If the module moves on the MCU, it could pinch and sever fingers, and if it falls from the MCU it could cause severe injury or death.

There is a limit to the number of modules that can be pulled out safely at the same time. (Maximum: Four M3 modules on an 8M base, or two M3 modules on a 4M base.)

- If the maximum is exceeded, the entire machine may fall over to the front, possibly resulting in serious physical harm. This is especially true when the front leveling bolts have not been adjusted.

Do not modify the module stopper mechanism on the base and remove the module without mounting the MCU first.

- The module could fall from the base causing severe injury or death.

Do not stare at the vision process light sources with naked eyes. Wear protective glasses.

- Eye damage may be caused by the light.

Stay off of the base.

- Failure to do so could result in injury.

When handling the MCU, watch out for corners and protrusions.

- Failure to do so could result in injury.

Always be ready to apply the caster brake when handling the MCU.

- Always use the caster brake when stopping an MCU loaded with a module.

⚠WARNING

When lifting a backup plate, be careful to not put your hands in the areas between the plate, width-changing ball screw, and hexagonal shaft. Also, be careful to not cut your hands on the corners of the conveyor rails.

- Failure to do so could result in injury.

Do not lift a backup plate if you are not strong enough, and maintain correct lifting posture if you do lift a backup plate.

- Because the backup plates are very heavy, lifting them incorrectly could result in back or other injuries.

Never insert hands or other body parts into the duct of the waste tape disposal unit.

- There is a very sharp cutter blade. Exercise extreme caution especially when carrying the unit.

Two or more people should carry the waste tape disposal unit.

- Maintenance of the waste tape disposal unit is usually accompanied by removing the unit from the machine. Two or more people should carry the unit because it is very heavy.

Ensure that the work bench where the waste tape disposal unit is placed is flat.

- The unit may fall to the ground if the work bench is tilted, causing personnel injury and the machine damages.

Do not touch the Y-axis linear motor in a M6S module immediately after production is stopped.

- Contact with the shaft or coil section could cause burns. The shaft and coil section of the Y-axis linear motor remain at high temperatures even after production is stopped.

People with a heart pacemaker should stay clear of the Y-axis.

- A heart pacemaker could malfunction due to the strong magnetic field generated by the linear motor for the Y-axis in M6S modules.

Do not disassemble the linear motor used for the Y-axis in the M6S module.

- Absolutely do not disassemble the linear motor coil and shaft parts. Injury and/or machine damage may occur by magnetic parts shooting out due to the strong force of the magnets.

⚠CAUTION

Be careful to not pinch your hands when opening and closing the front or side covers.

- Failure to do so could result in injury.

Do not insert fingers or other body parts into the gap between the machine side cover and base.

- Failure to do so could result in injury.

When working in front of the base, ensure that clothing or arms are not caught on the guide pins on the top of the base to prevent the risk of injury.

- Failure to do so could result in injury.

When there is no module on the base, do not block the module position confirmation sensor or module seating confirmation sensor to activate the air cylinder.

- Air cylinder may activate to move lever or clamper causing personnel injury.

Do not push the mark camera unit by hand when moving the placing head.

- The position of the mark camera may be shifted, which negatively affects the placing accuracy of the machine.

Be careful to not put your hands underneath the nozzle station when loading it in the machine.

- Failure to do so could result in injury.

Ensure to place the waste tape disposal unit with the duct upside on the work bench.

- The duct of the unit may creep by its own weight.

Be careful of the magnetic attraction when using a jig near the linear motor of the M6S.

- Injury could result by a jig being drawn towards the linear motor.

Keep magnetic cards, wristwatches and other precision machines away from the linear motor of a M6S module.

- Damage to items may occur due to the magnetic field generated by a linear motor.

1.3.2 Tray Unit-L

⚠WARNING

When pushing the tray unit-L into the machine, ensure that no one is between the tray unit-L and machine base.

- A person could be seriously injured or crushed to death if caught between the tray unit-L and machine.

Lock the caster brake whenever the tray unit-L is removed from the machine.

- Depending on the slope and condition of the floor, the tray unit-L could roll unexpectedly, possibly resulting in injury.

⚠CAUTION

Be careful to not pinch your fingers when opening or closing the tray unit-L covers (upper cover, front cover, lower cover, etc.). Do not leave the doors open while the tray unit-L is unattended.

- Failure to do so could result in injury.

When operating the handle for adjusting the tray unit-L height, make sure that hands are not caught between the handle and cover.

- Failure to do so could result in injury.

When removing or replacing the empty tray box, be careful to not pinch your hands between the tray unit-L and empty tray box.

- Failure to do so could result in injury.

Do not insert your hand through the bottom of the tray unit-L into the inner section where the mechanical parts are.

- Failure to do so could result in injury.

1.3.3 Tray Unit-M

⚠WARNING

Do not insert hands or other body parts in the space between the tray unit-M and the feeder pallet when attaching or removing the tray unit-M.

- Failure to do so could result in injury.

Use two or more people to lift, carry and position the tray unit-M.

- The tray unit-M is extremely heavy and injury could result if dropped.

Do not insert hands or other body parts in the side spaces between the machine and the tray unit-M during automatic operation.

- Body parts may be pinched or caught, resulting in injury.

⚠CAUTION

Be careful to not pinch or get body parts caught on the tray unit-M door when opening and closing it. Ensure that the door is never left open.

- Body parts may be pinched or caught, resulting in injury.

1.4 Safety Labels

To warn the operator of hazards, safety labels are attached to the machine at the positions indicated in the figure below.

Familiarize yourself with each label and its message before operating the machine.

M3(S) Module

M6 Module

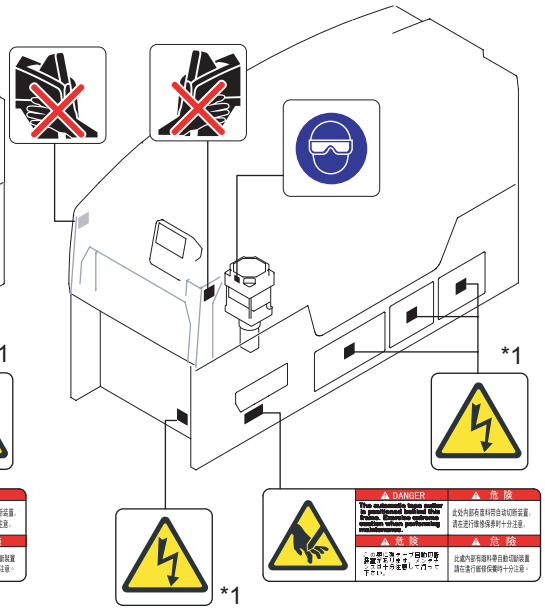

M6S Module

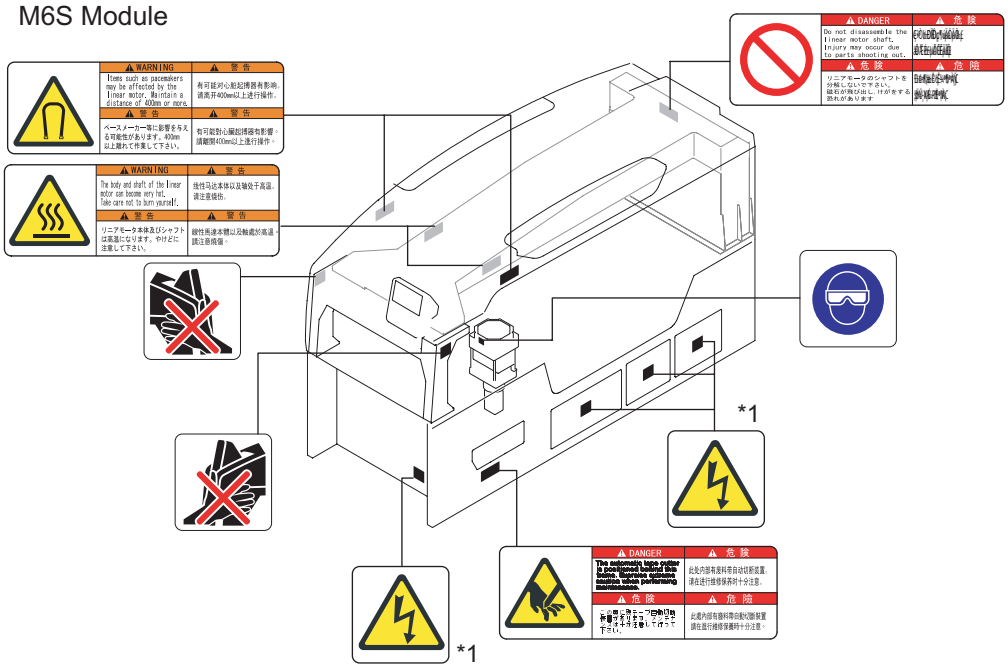

NXTSAF010Eb

4M base

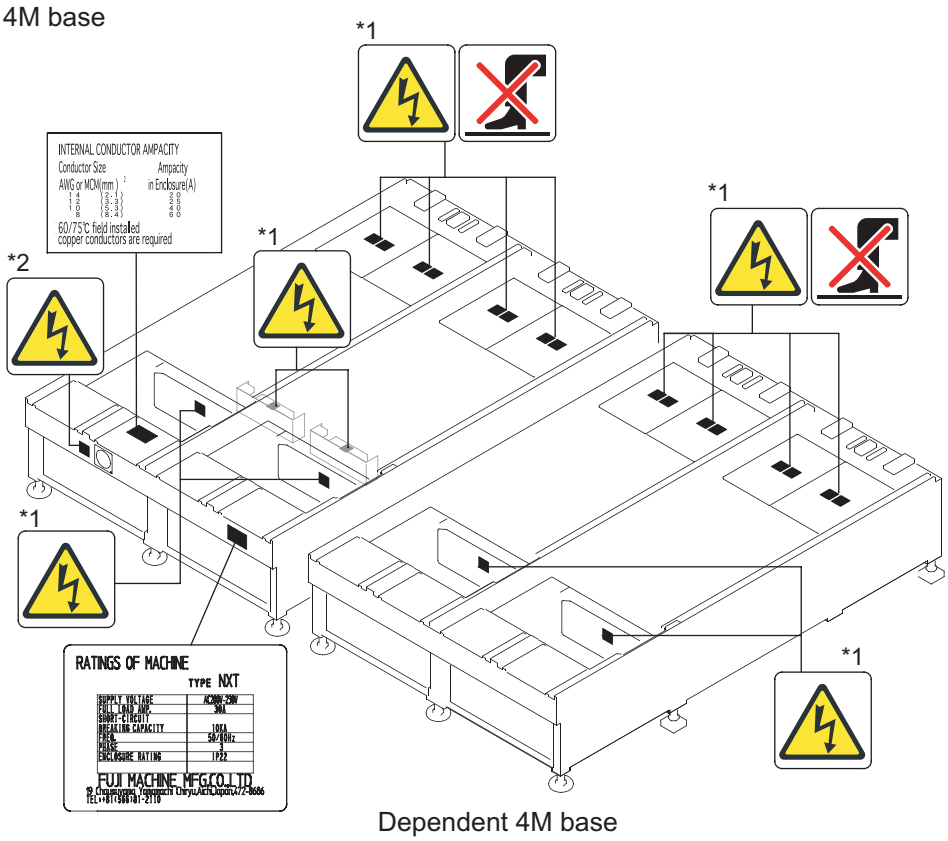

Dependent 4M base

2M base

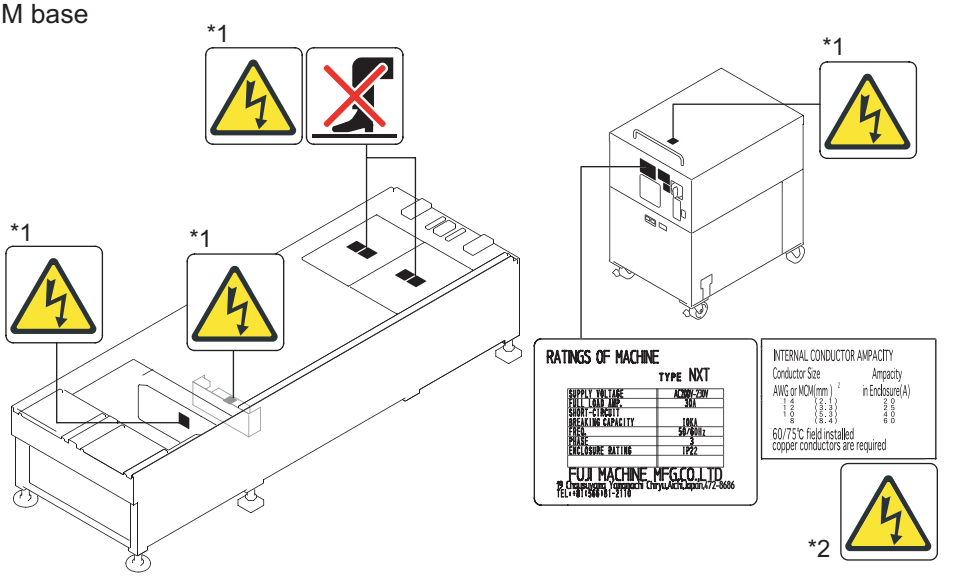

NXTSAF011E

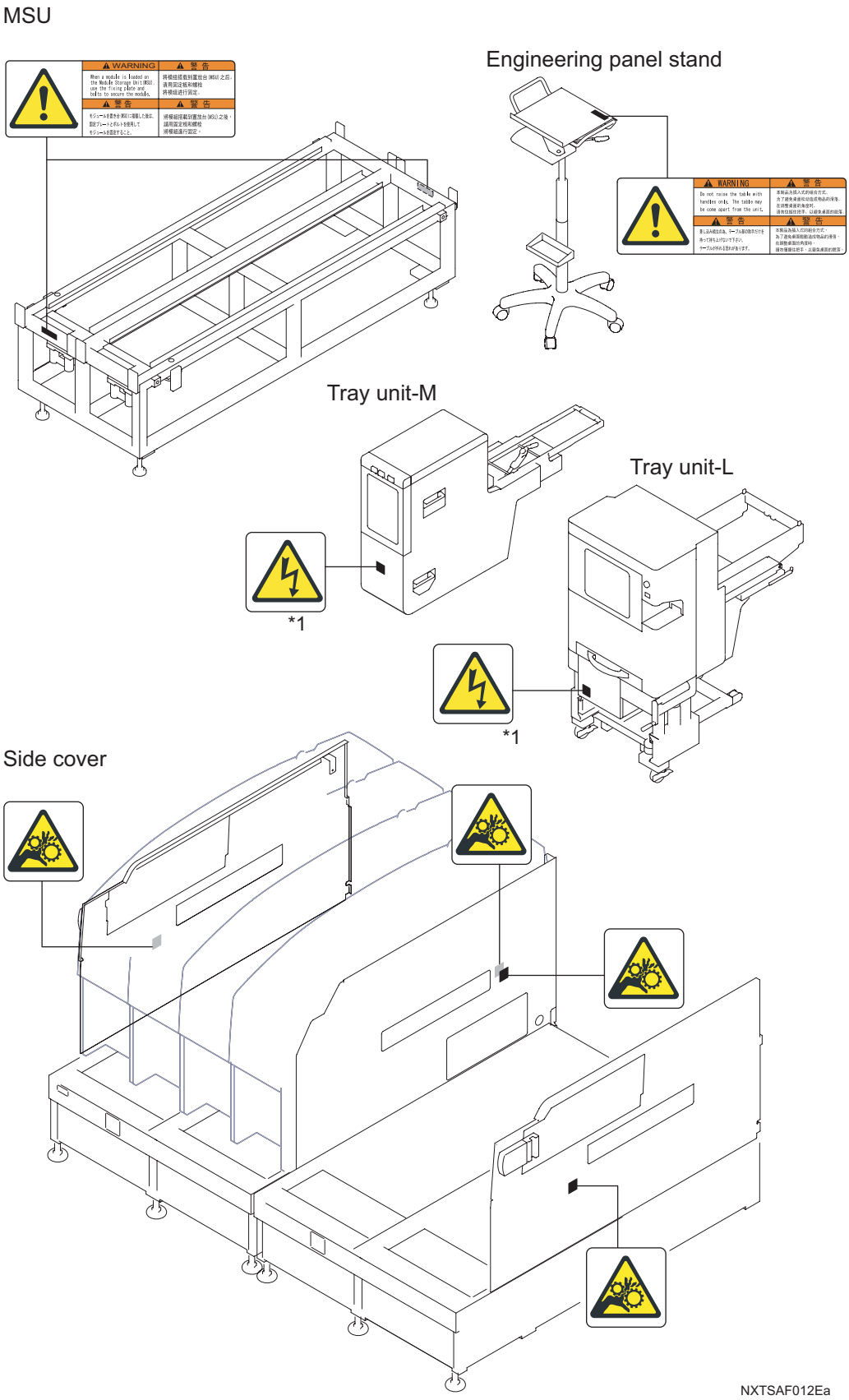
MSU
WARNING
When a module is loaded on the Module Storage Unit(MSU), use the fixing plate and bolts to secure the module.
警告
将模组搭载到置放台(MSU)之后，请用固定板和螺栓将模组进行固定。
警告
モジュールを置き台(MSU)に搭載した後は、固定プレートとボルトを使用して、モジュールを固定すること。
Engineering panel stand
WARNING
Do not raise the table with handles only. The table may be come apart from the unit.
警告
本解品为嵌入式的组合方式。为了使免桌面和动摇或物品的保持，在调整桌面高度时，请在两侧进行。以避免桌面的脱落。
警告
本品はハンドルのみ、テーブル部の動きだけを持ってお上げないでください。テーブルが外れる恐れがあります。
警告
本解品为嵌入式的组合方式。为了避免桌面脱落或物品的保持，在调整桌面的高度时，请在整个台面下，以避免桌面的脱落。
Tray unit-M
*1
Tray unit-L
*1
Side cover
NXTSAF012Ea

1.4.1 NXT Safety Label Explanations

Symbol	Explanation
	Warning: Pinching danger Do not insert hands or other body parts in the space between adjacent modules.
	Mandatory action, Direction: Eye protection Direct exposure to the lighting unit may result in damage to the eyes. Ensure to use light protection eyewear when necessary.
	Caution, Warning: Shock danger *1: High voltage! Contact may cause electric shock. Turn off the power prior to servicing. *2: Connect a 200 - 230V AC +/-10% 50/60Hz primary power supply to the machine.
	Caution, Warning: Cutting danger An automatic tape cutter is positioned behind this frame. Exercise extreme caution when performing maintenance.
	Warning: Do not step Do not step or stand on this area.
	Caution, Warning: Moving parts Do not insert hands or other body parts. Moving parts may cause injury. Turn off the power before inserting any body parts.
	Warning: High Temperature Contacting with the main body and shaft of the linear motor could result in burns. They are high temperature.
	Warning: Magnetic Field Heart pacemakers and other precision equipment could be affected by the magnetic field. Always keep a distance of 400 mm or more.
	Warning: Disassembly prohibited Do not disassemble the linear motor shaft. Injury may occur by parts shooting out due to the strong force of the magnets.

1.5 The EMERGENCY STOP Button

In the event of an emergency, press any of the red EMERGENCY STOP buttons located on the machine at the positions indicated in the figure below.

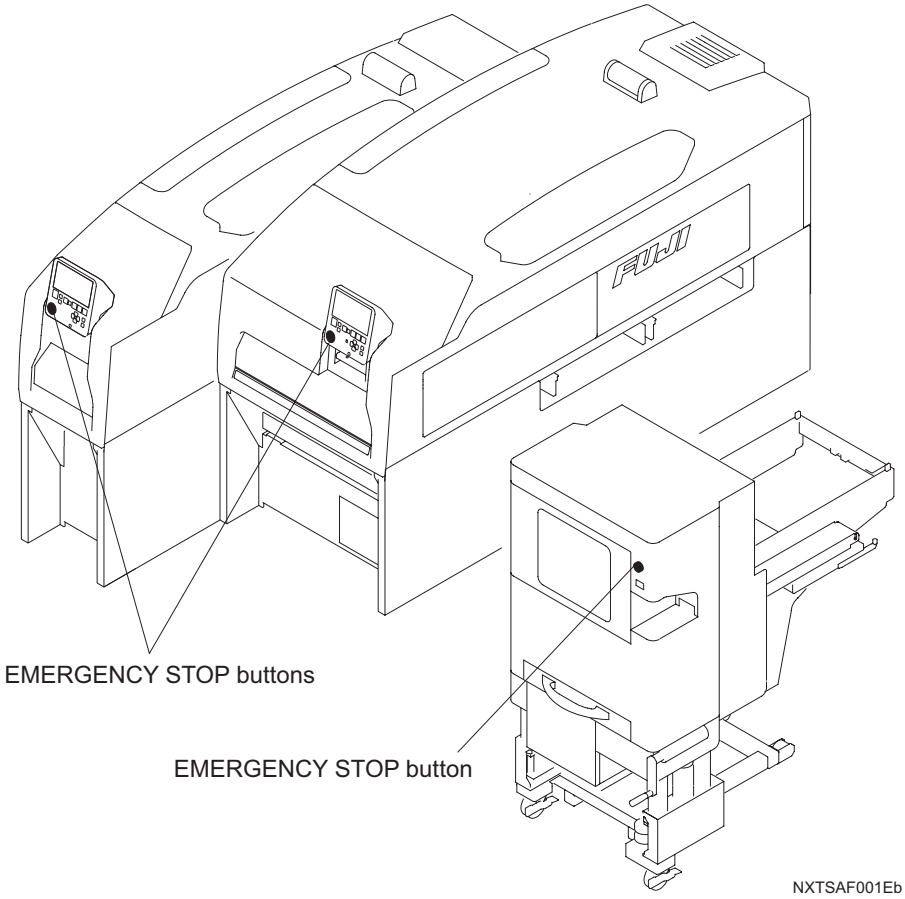

1.6 Locking System

When performing maintenance or service on the machine, all personnel who service the machine should use locks to prevent others from turning on the machine power or air. This procedure is referred to as a lockout.
To prevent accidents, especially those caused by mistakes when multiple operators are present, all related personnel should have thorough knowledge of lockout procedures.

1.6.1 Lockout Procedure

Prepare 2 commercially available padlocks, and require all service personnel to carry lockout nametags.

1. Switch off the machine power.
2. Rotate the main switch on the base to the OFF position.

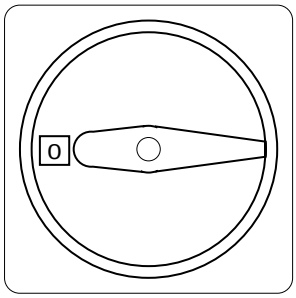

NXTSAF004

3. Lock the main switch with a padlock.
   All personnel working on the machine should attach their lockout nametags to the padlock.

Note: Note:The presence of a nametag on the padlock signals that the machine is being serviced and that the lock is not to be removed.

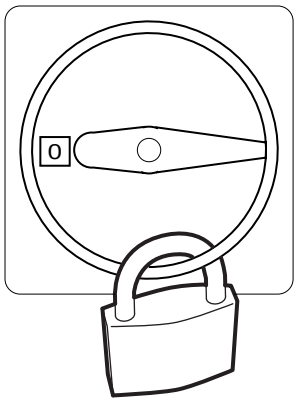

NXTSAF006

4. In the same manner, rotate the air valve handle to the OFF position and lock with the second padlock.
   All personnel working on the machine should attach their nametags to the padlock.

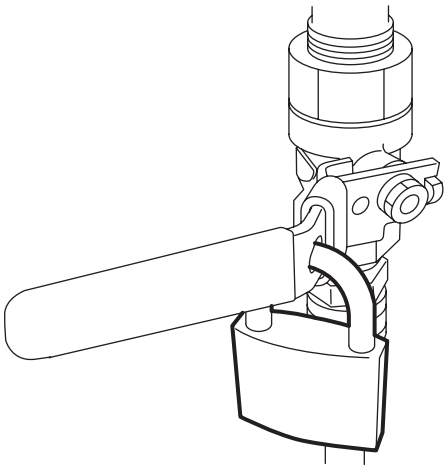

5. The lockout is complete.

1.6.2 Unlocking Procedure

When finished servicing the machine, all personnel should remove their lockout nametags from the padlocks.

1. Confirm that all personnel are clear of the machine.
2. Confirm that the machine is in a safe condition. Remove the padlock from the air valve and rotate the handle to the ON position.

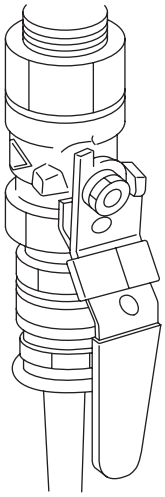

NXTSAF007

3. Remove the padlock from the main switch and rotate it to the ON position.

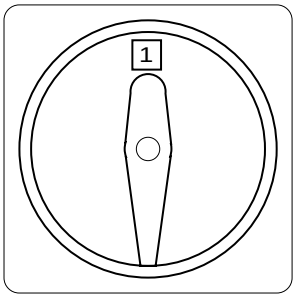

NXTSAF008

4. This concludes the unlocking procedure.

MEMO:

2. Setting Up the NXT

2.1 Introduction

The aim of this manual is to provide procedural explanations of how set up the NXT machine. The procedures outlined are to help an NXT user perform the various mechanical, and software related operations necessary to set up the NXT for use.

The order of the procedures in this manual are basically in the order that they should be performed for the easiest set up. In all cases, not all procedures (such as setting the IP address of the base) need to be performed, especially when just moving the machine/base within the factory. Refer to the table below for an outline of the setup process.

Chapter	Section		Ord.	Step
3. Machine Set Up	Moving a Machine		1	Move the machine to the desired location.
	Removing Fixing Brackets		2	Remove the brackets used to fixed the axes during transport.
	Making Basic Connections	Electric Power Supply	3	Connect the power cable to the base.
		Network Cable	4	Connect the network cable to the base.
		Air Supply	5	Connect the air supply to the base.
	Leveling the Machine		6	Level the machine and ensure that the conveyor height matches that of the other machines in the line.
	Making Network Settings		7	Specify the IP address and other network related settings for the set up base.
	Connecting NXT Bases		8*	Connect the communication cables between the NXT bases.
	Installing Additional Dependent Bases		8*	Connect the communication cables and the pneumatic tubes between the NXT bases. Fix the bases with brackets.
	Connecting an NXT Base to Other Machine Types		8*	Connect the communication cables between the NXT base and neighboring machines other than NXT bases.
	Tray Unit-L	Adjusting the height and levelness	9	Use a level gauge to adjust the height and levelness.
4. Setting Up NXT Machines in Flexa	Creating a factory		10	Create a factory in the Fuji Flexa line configuration, if necessary.
	Creating a line		11	Create a line in the Fuji Flexa line configuration, if necessary.
	Creating a machine		12	Create the NXT machine in the desired line in the Fuji Flexa line configuration.

Chapter	Section		Ord.	Step
5. Accessory Software Installation	Required Items		13	Ensure that the necessary items to install Accessory Software are available.
	Installing Fuji Flexa		14	Install Fuji Flexa on the computer that Accessory Software is to be installed, if it is not already installed.
	Installing NXT Accessory Software		15	Install the Accessory Software on the computer that is to act as the Accessory Software server.
6. Setting Up Fujitrax Verifier	Required Items	Installing and running the Central Server	16**	Ensure that the Central Server for Fujitrax Verifier has been installed and is running.
		Adding the NXT to the Fujitrax line configuration	17**	Add the NXT machine to the line configuration for the Kit Server that is to be used for the NXT.
		Setting the NXT Fujitrax configuration settings	18**	Change the Fujitrax configuration settings on the NXT.
		Registering users for Kit Handy access	19**	Register the ID for the users that are to access NXT data through Kit Handy.

*Note: * Perform the items required based on the line composition.*
*** These steps are only necessary if Fujitrax Verifier is to be used.*

3. Machine Set Up

The procedures in this chapter are used to set up a machine that is newly arrived or that has been moved to a new location. Not all sections are not required in all cases, just perform the actions necessary.

3.1 Moving a Machine

Use a forklift or similar lifting device to move the machine to the setup location. Place leveling sheets on the floor and lower the machine onto the leveling sheets. Furthermore, depending on the machine base configuration, it may be necessary to secure the base to the floor using anchor bolts or adhesive sheets and so forth to prevent the bases from shifting.

3.1.1 Precautions when moving the machine

When moving a machine, be sure to observe the safety measures described below in order to avoid accidents.

- Be sure that the workers who are moving the machine are wearing safety shoes and helmets.
- Prepare the transport path in advance, and be sure that those who are not assisting in the machine transport are kept out of the area.
- The machine should be moved only by qualified personnel.
- Before moving the machine, attach the machine brackets (red) which were attached when the machine was delivered. (Attach the brackets in the prescribed positions.)

Machine Weight

Weights for each type of module, base, and tray unit used in the NXT are listed below. The actual weight of the machine should be calculated based on the type of module(s), base and tray-unit(s) being used. (Values listed below do not include the weight of any packing materials.)

Note:

1.Use a forklift which is suitable for the weight of the machine in question.

2.Be sure to insert the forklift forks at the prescribed position.

3.Use care to avoid bending the leveling bolts.

4.If the balance of a lifted machine is unstable, lower the machine immediately.

5.Raise and lower the machine slowly to avoid subjecting the machine to shocks.

NXT Description	Weight (kg)
2M base	345kg
Stand-alone control box for 2M base	123kg
Indipendent 4M base	720kg
Dependent 4M base	680kg

NXT Description	Weight (kg)
8M base	760kg
M3(S) module	300kg
M6 module	470kg
M6S module	487kg
Trayunit -L (including 7 trays and magnets)	150kg
Trayunit -M	37kg

3.1.2 Transport Procedure

1. Prepare the required number of leveling sheets suitable for the panel conveyance height.

Drawing No.	Part Name	No. of Sheets/ 8M Base	No. of Sheets/ 4M Base	No. of Sheets/ 2M Base	Panel Conveyance Height
GGA8020	Leveling sheet	10	6	4	For H = 900
GGA8040	Leveling sheet	10	6	4	For H = 950

Note: The dimensions in the drawing below with an asterisk (*) are reference values.

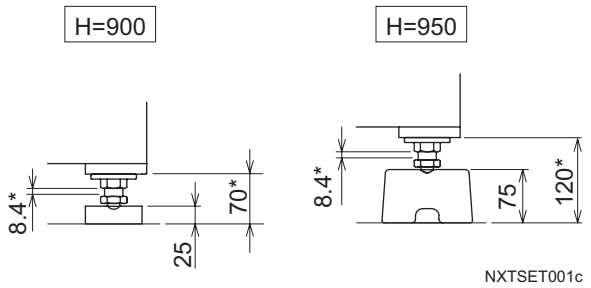

2. When using 4M bases independently or when connecting two 2M bases, place adhesive sheets between the floor and the leveling sheets to prevent the bases from shifting. Prepare the required number of adhesive sheets.

Note: When using 2M bases independently, secure the bases to the floor with anchor bolts. (Refer to 3.8.3 "Using One 2M Base".) Furthermore, multiple bases should be connected using brackets. (Refer to 3.8.13 "Fastening Extensions".)

Drawing No.	Part Name	No. of Pads/ 4M Base	No. of Pads/ 2M Base	Panel Conveyance Height
PG01890	Anti-vibration pad	6	4	For H = 900
PG01900	Anti-vibration pad	6	4	For H = 950

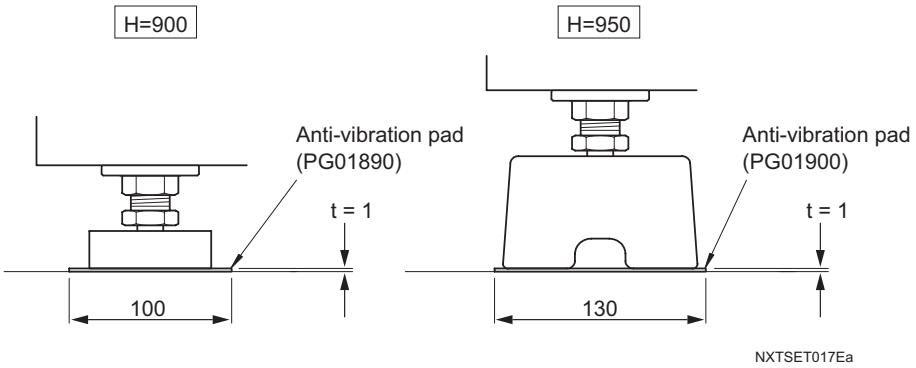

3. At the new position, tentatively set the level blocks in the proper positions for the new machine.

<8M Base>

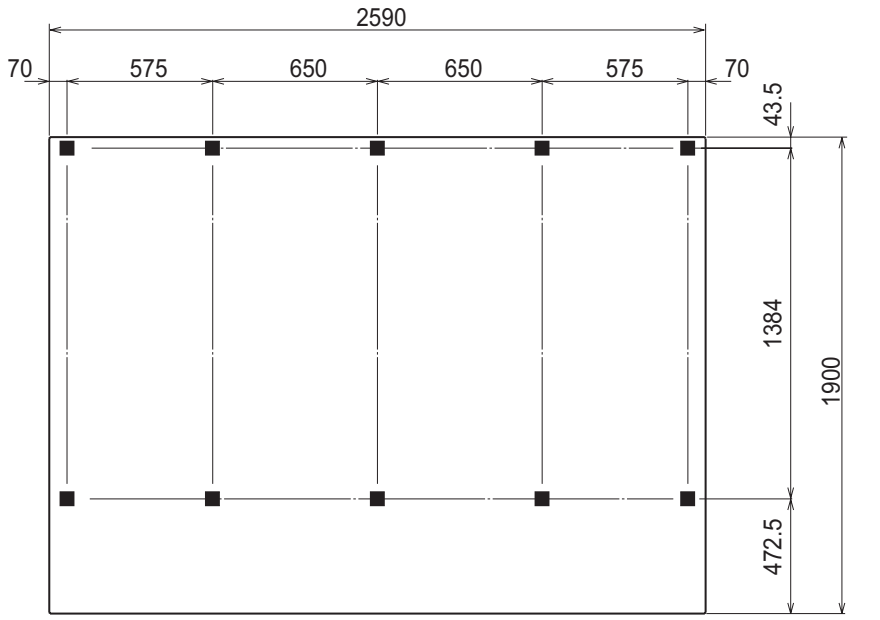

Front side of the machine

<4M Base>

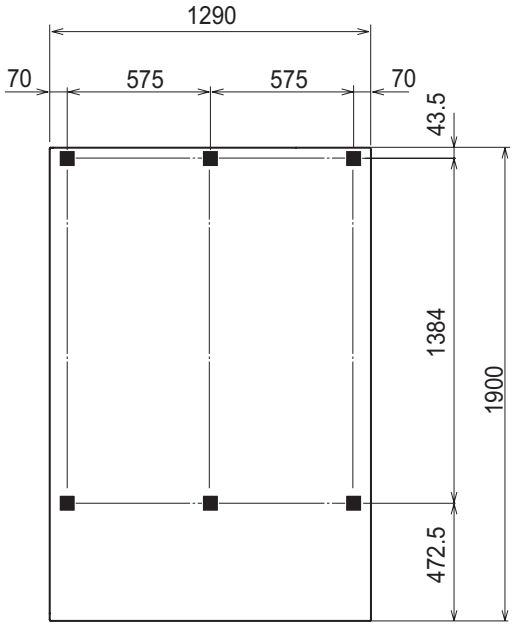

Front side of the machine

NXTSET002E

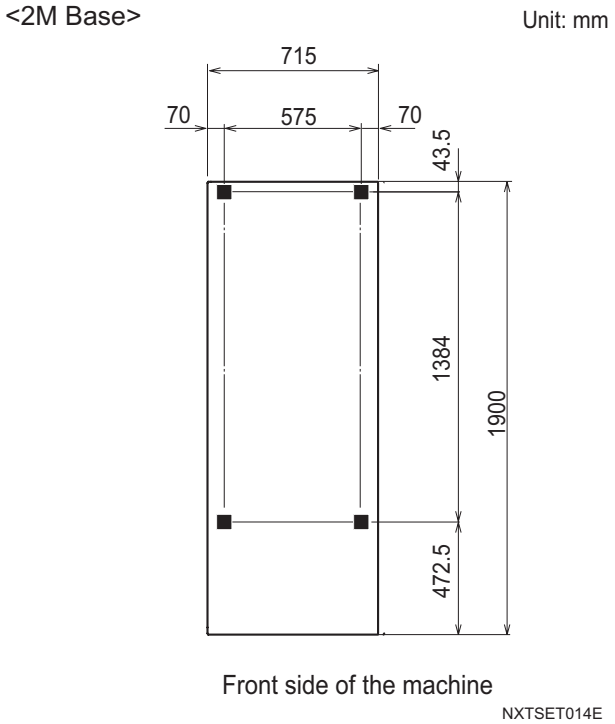

4. When moving an already existing machine, remove all tape feeders, air hoses, and disconnect any external wiring to the machine.
5. When moving an already existing machine, use the machine brackets (red) to secure main components. See the illustrations shown in 3.2 "Removing Fixing Brackets".

Note: If there are no machine brackets available, use rope, etc., to secure the various parts of the machine to avoid damaging them.

6. Before moving M6S modules, after ensuring that the linear motor shaft is room temperature, attach the linear motor shaft protective covers. Refer to the illustration in "3.3 Removing the Linear Motor Shaft Protective Covers" for reference.

7. Insert the forklift so that its left and right forks are the same distance from the machine center. Moreover, the space between the left and right forks should be set as wide as possible.

⚠DANGER

Do not attempt to perform any tasks beneath the elevated machine.

Note:

6. The forklift should be operated in accordance with the manual provided by the forklift manufacturer.

7. To lift 8M or 4M bases insert the forklift 1100 mm or more in from the rear. For 2M bases, insert the forklift from the side so the forklift arms extend under the base through to the opposite side.

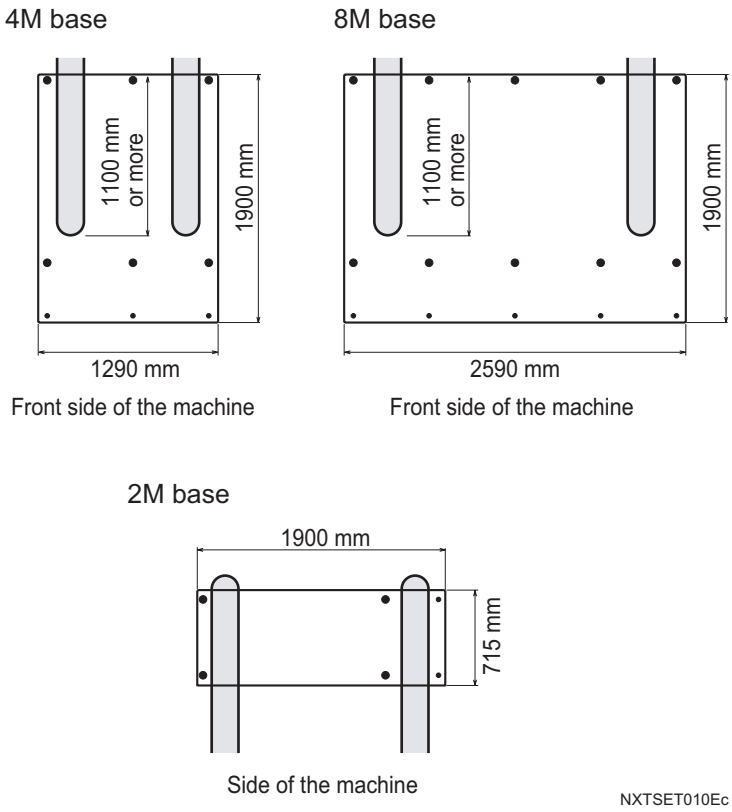

8. Using the forklift, lift the machine to a height of 30 cm.
9. Transport the machine by forklift to its new location, then lower the machine slowly onto the leveling sheets or leveling blocks.

3.2 Removing Fixing Brackets

The next step in the set up process is removing the red fixing brackets attached to the machine. It is important to remove all of these brackets before attempting to turn on the machine.

3.2.1 Procedure

⚠WARNING

People with a heart pacemaker should stay clear of the Y-axis. A heart pacemaker could malfunction due to the strong magnetic field generated by the linear motor for the Y-axis in M6S modules.

⚠CAUTION

Be careful of the magnetic attraction when using a jig near the linear motor of the M6S. Injury could result by a jig being drawn towards the linear motor.

Keep magnetic cards, wristwatches and other precision machines away from the linear motor of a M6S module. Damage to items may occur due to the magnetic field generated by a linear motor.

1. Remove the red fixing brackets that are fixing the front of the module to the base. There is one for every two M3(S) modules and one for each M6(S) module. Retain the bolts that go into the front of the module. These bolts are used to fixed the module/ base covers.
2. Remove the red fixing brackets that are fixing the back of the module to the base. The quantity of brackets exceeds the number of modules present by one (i.e., a 4M base with two M3(S) modules and one M6(S) modules (three modules total) has four brackets).
3. Remove the feeder pallet fixing brackets. There is one bracket for each module. The fixing brackets are on the right side.
4. Remove the X- and Y-axis fixing brackets from each module. These brackets are attached to the front of the left guide rail for the Y-axis. There is one per module. Do not push on the side of the head or use the handle to try to move the head.
5. Remove the XS-axis fixing brackets from each M3(S) module. These are attached to the right side of the heads.

Note: Remove any additional protection material from inside and outside the machine while removing the fixing brackets. Be sure that the inside of the modules is clear of any shipping materials before continuing.

<For M3(S) Modules>

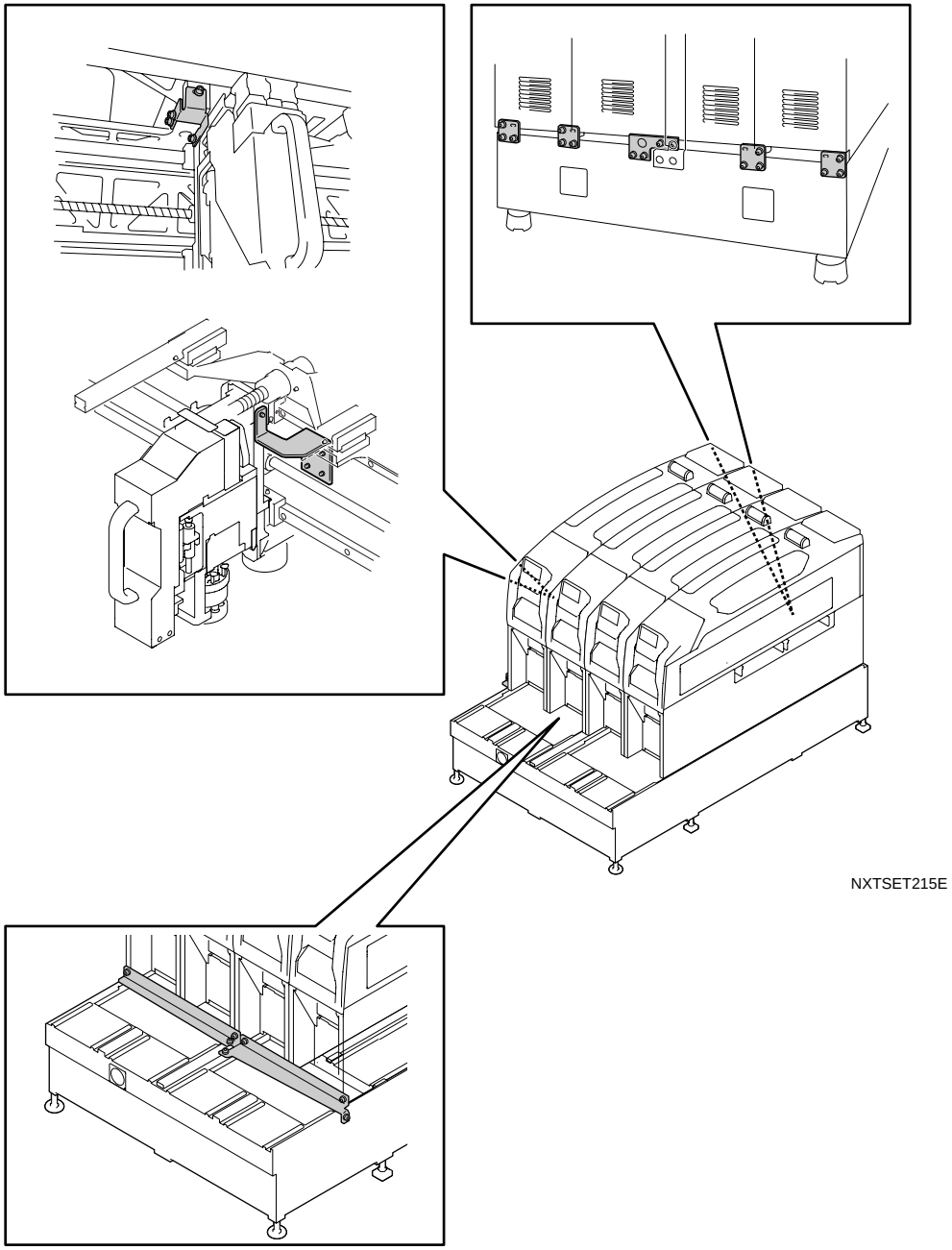

<For M6 (M6S) Modules>

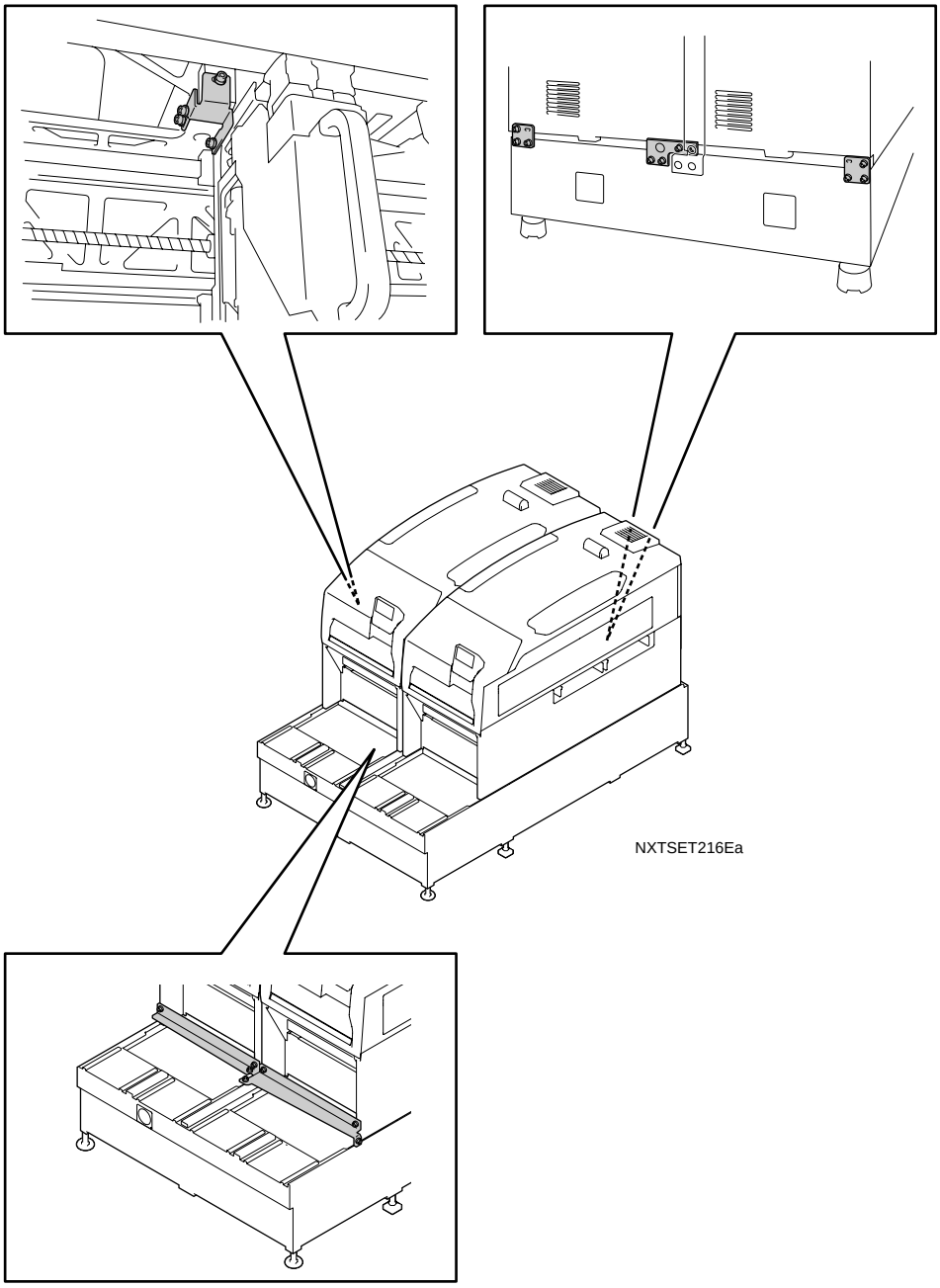

3.3 Removing the Linear Motor Shaft Protective Covers (M6S)

Remove the protective covers from the linear motor shaft for M6S modules.

3.3.1 Procedure

⚠WARNING

People with a heart pacemaker should stay clear of the Y-axis.
A heart pacemaker could malfunction due to the strong magnetic field generated by the linear motor for the Y-axis in M6S modules.

⚠CAUTION

Be careful of magnetic attraction when using jigs/tools near the linear motor of M6S modules.
Injury could result by the jig/tool being drawn towards the linear motor.

Keep magnetic cards, wristwatches and other precision machines away from the linear motor of a M6S module.
Damage to items may occur due to the magnetic field generated by a linear motor.

1. Open the seam in the protective cover and gently remove the protective cover.
2. Store the protective covers in a safe place. These covers should be used when items such as maintenance is performed on a M6S module.

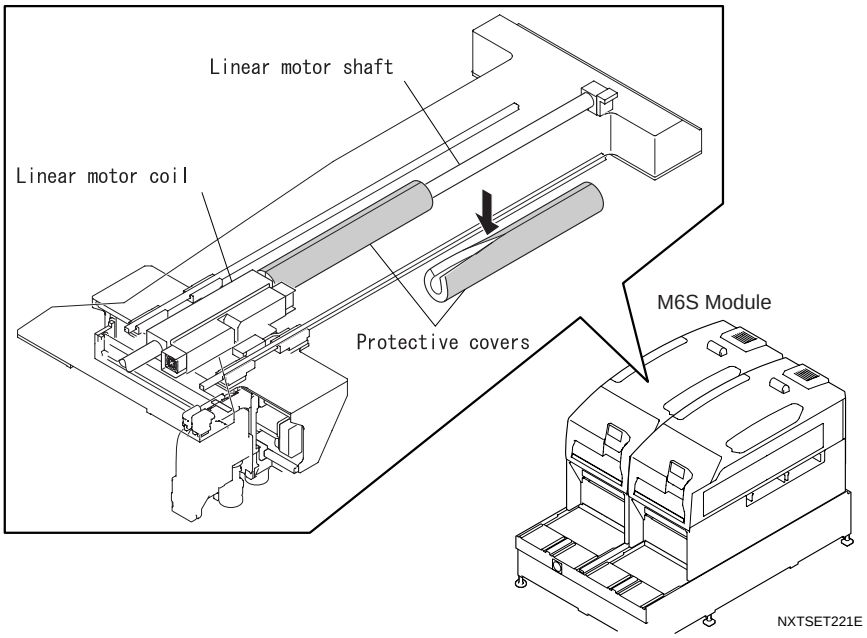

3.4 Making Basic Connections

The procedures for connecting the three basic connections; power, network, and air are described below. It should be the easiest to connect these three connections at the same time.

3.4.1 Electric power supply

Power supply of 200 - 230 VAC is required. An external transformer is required when the power supply voltage lies outside this range.

The maximum power capacity is 6.5 kVA. Be sure to connect the machine to a power supply which exceeds this capacity.

The factory power supply should be equipped with a ground leakage breaker meeting the following requirements for safety.

- Rated current: 100 [mA]
- Actuation time: 0.1 sec or less (high speed)

Procedure

⚠DANGER

Verify that the external power supply is OFF before performing this procedure and that no power is being supplied to the cable.

1. Remove the waste tape boxes and then remove the cover underneath the power switch.
2. Feed the power cable from the bottom of the base.

3. Connect the ground wire to the dedicated ground terminal.

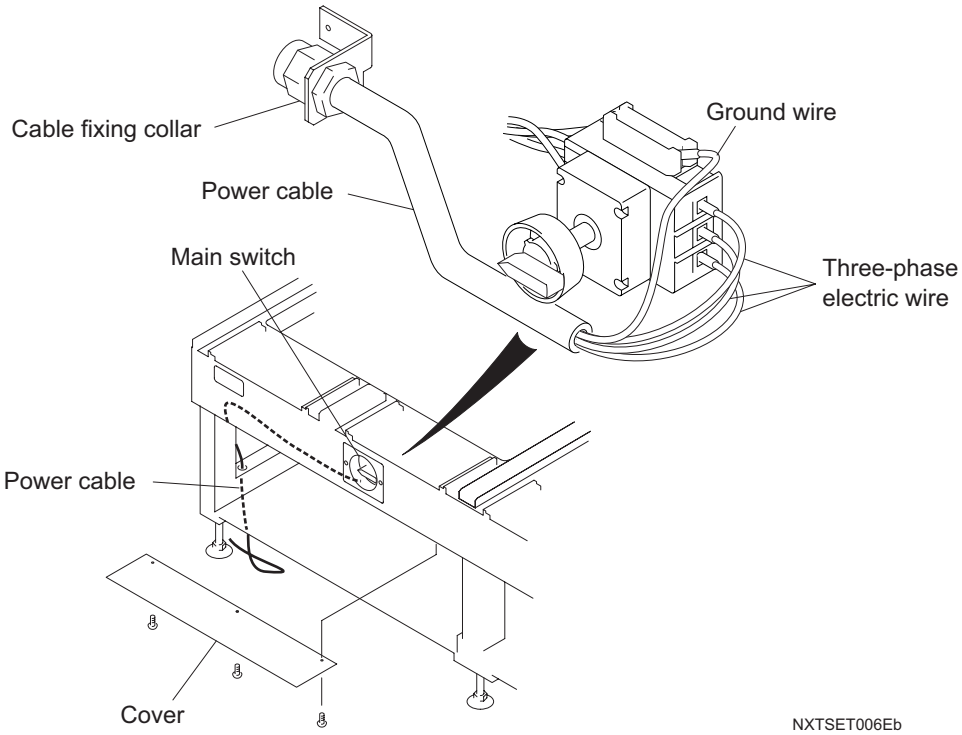

4. Connect the 3-phase cable to the main switch and tighten to the prescribed torque of 1.25 Nm. It is important the the three phases for the power are correct. (After the machine is turned on, ensure that the vacuum pump generates vacuum, not pressure.)

Note: Terminal screw tightening torque: 1.25 N·m
Terminal screws should be tightened periodically.

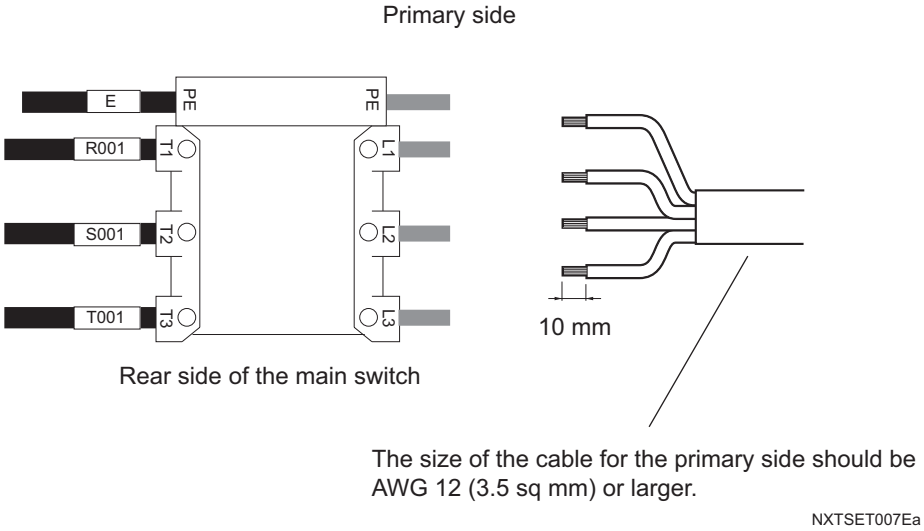

5. Tighten the cable fixing collar to secure the power cable and once the phases for the power has been confirmed, fix the cover back under the power switch.

3.4.2 Network Cable

The machine is connected to the host computer by an Ethernet twisted-pair communication cable (category 5) for the purpose of job transmission and production log compilation. Depending on the setup of the factory, this can be run at the same time as the power cable or run with the cables connecting the bases/other machines together.

Procedure

1. Connect one end of the transmission cable to the Ethernet connector to a hub or network connection, and connect the other end to the connector on the machine.
2. Connect the other end to the Ethernet connector in the machine as shown below.

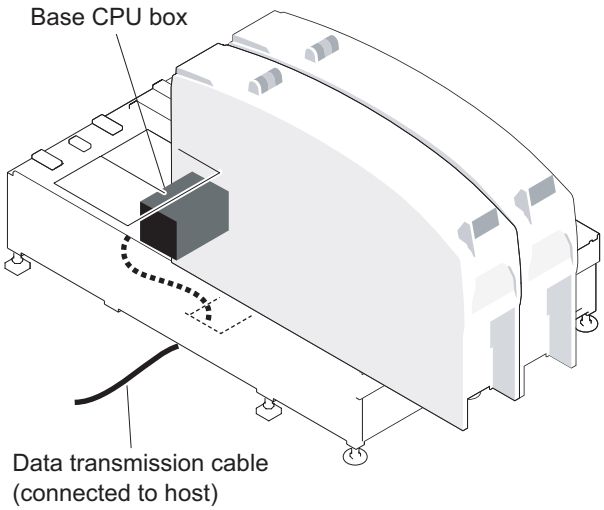

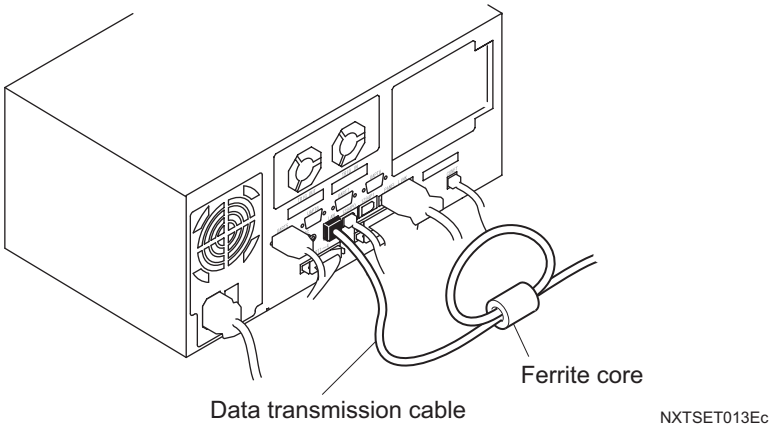

3.4.3 Air supply

Connect an external air supply hose to the machine and adjust the filter regulator to set the air pressure to the specitied value. This should be performed before leveling in order to unclamp the modules that are on the base. This does not have to be performed before leveling if the base has no modules on it.

Procedure

⚠WARNING

When working with a module pulled out and the cover over the air supply connection is off, ensure that no one pushes in the module. If pushed in while body parts are in the opening, the module may pinch, sever, or cause serious injury.

1. Attach a socket to the end of the air supply hose and connect the socket to the air connector plug of the machine.
2. Turn the air supply lever on so air is supplied to the machine.
3. After power is supplied to the machine, adjust the air supply pressure.
4. Pull up the knob on the filter regulator to unlock it.
5. Turn the knob until the digital pressure gauge reads 0.5 MPa.

Note: The digital pressure gauge is located at the front of the base

6. Push down the knob to lock it.

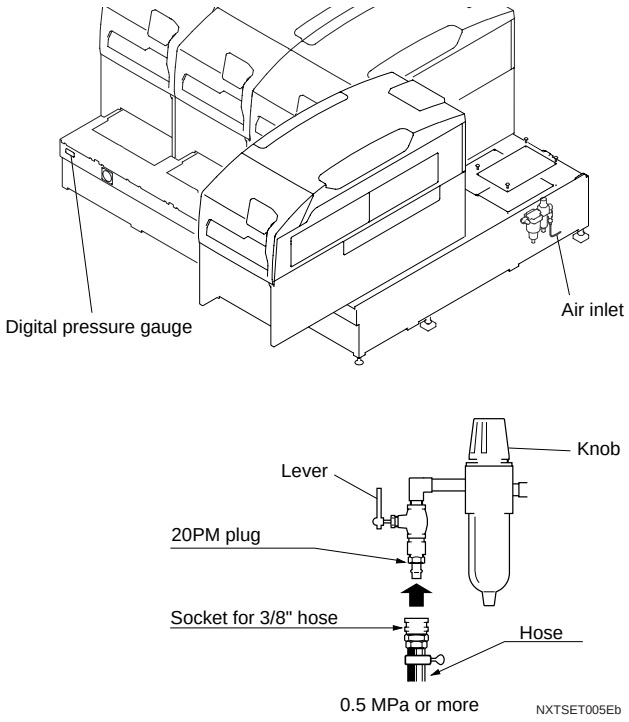

Note: Fuji does not supply the hose.

3.5 Leveling the Machine

Use spirit levels to keep the bases level and adjust the conveyor height so that it matches the panel conveyance height.

3.5.1 Procedure

1. Pull out a module and place spirit levels in both the X- and Y-directions at the measurement position (polished surface) at the rear of the machine.

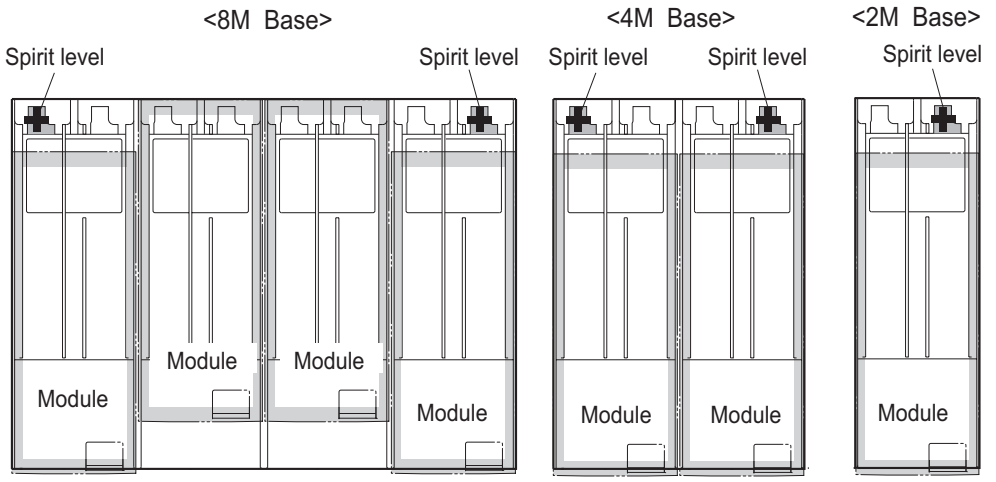

⚠ WARNING

There is a limit to the number of modules that can be pulled out safely at the same time. (Maximum: Four M3 modules on an 8M base, two M3 modules on a 4M base, or one M3 modules on a 2M base.)

If the maximum is exceeded, the entire machine may fall over to the front, possibly resulting in serious physical harm. This is especially true when the front leveling bolts have not been adjusted.

2. Loosen the lock nuts on the leveling bolts shown in the drawing below. Rotate the leveling bolts to adjust the conveyor height so that it matches the panel conveyance height. Adjust the height while watching the spirit levels to ensure that the bases remain level.

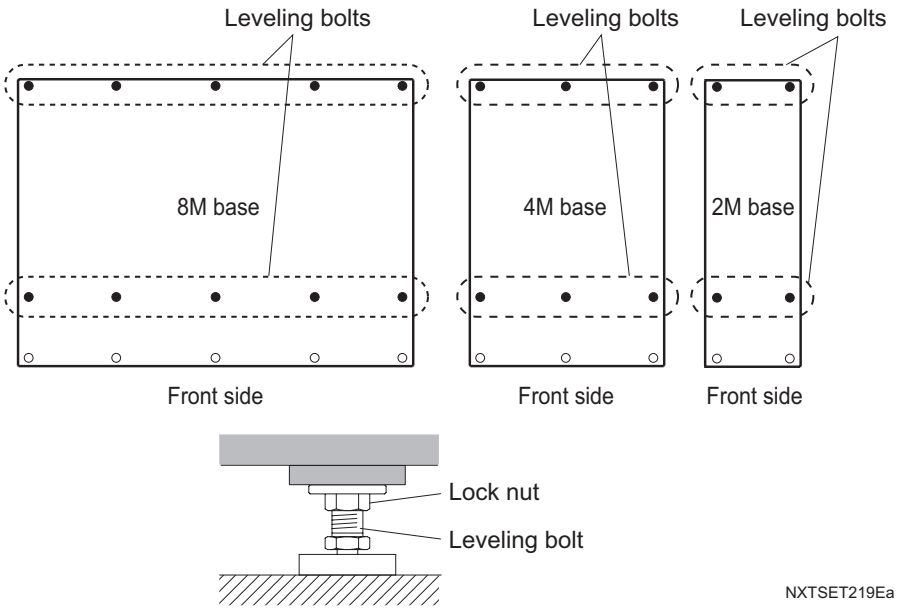

3. Next loosen the nuts on the leveling bolts at the front side of the base. Rotate the front side leveling bolts so that the machine weight is applied lightly.

Note: Avoid applying too much of the machine weight to the front side leveling bolts to the extent that the base leveling is affected. These bolts are used as a back-up to support the bases when modules are pulled out.

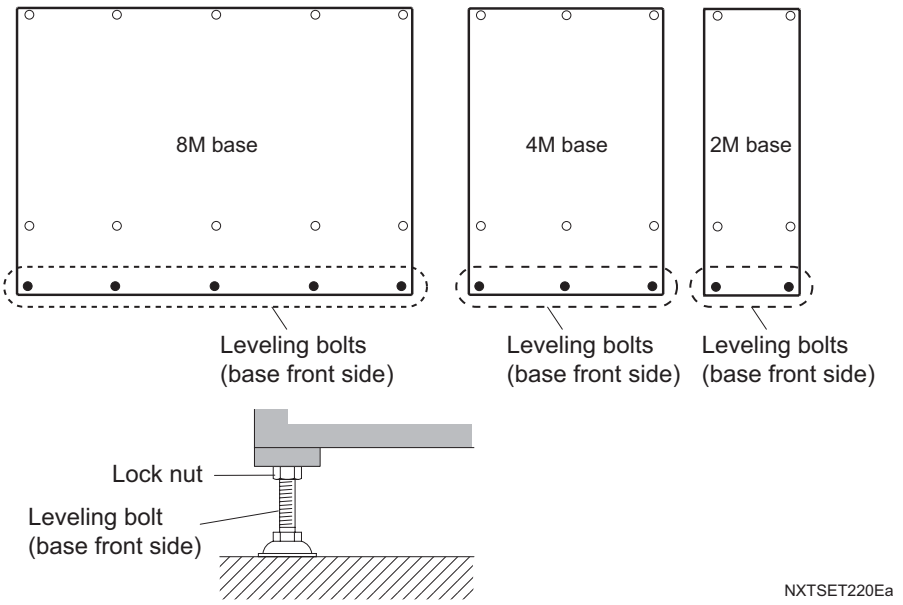

4. After verifying that the panel conveyance height and the leveling accuracy are correct, tighten the lock nuts on the leveling bolts. Changes can be made by tightening the lock nuts, although the levelness should always be checked again after adjustments have been made.

Note: If the lock nuts are not sufficiently tightened, vibrations may cause a drop in placement accuracy.

3.6 Making Network Settings

Before communication is possible with the NXT base, the IP address must be changed to an appropriate IP address for the factory. If the new IP address is not known, then contact the network administrator for an appropriate IP address.

The IP address for a base can be changed remotely with ease. It is necessary to know the current IP address in order to change the IP address to an IP address that is appropriate for the network. The NXT software tool, NetworkSetting, is used to change the current network settings for a base.

3.6.1 Procedure

1. Insert the NXT software CD-ROM into the CD-ROM drive and open the drive for the CD-ROM through Explorer.
2. Double-click [NXT] to open that folder.
3. Double-click NetworkSetting.exe to start the software.
4. When requested, enter the IP address of the base for which to change the network settings and then click [OK].

Note: If the current IP address of the base is unknown, use the information command found in manual mode on one of the modules attached to the base to display the current IP address for the base.

5. Specify the new IP address, subnet mask, and default gateway in the appropriate text boxes and click [Next].

Note: Even if not changing any of these items, these values must be entered using the current values.

6. Specify the host name for the NXT and then enter any domain information if a domain is used.
7. Click [Next].
8. Specify the preferred and alternate DNS servers in the appropriate textboxes if these are used.
9. Once all settings have been completed, click [Ok] and the new settings are sent to the NXT machine.
10. Reboot the NXT machine to enable the new network settings.

3.7 Connecting NXT Bases

Follow this procedure to connect independent NXT bases. Refer to section 3.8 "Installing Additional Dependent Bases" for details of installing additional NXT bases.

Note: In the following explanations, the example NXT panel flow is left to right.

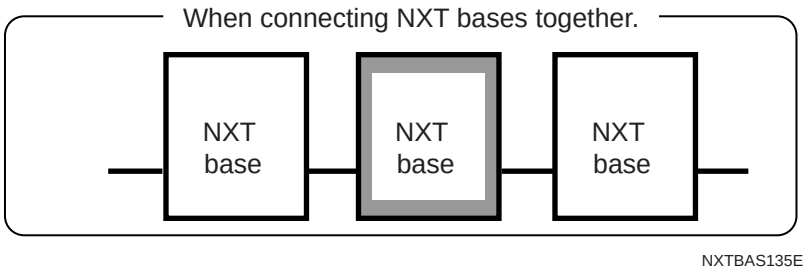

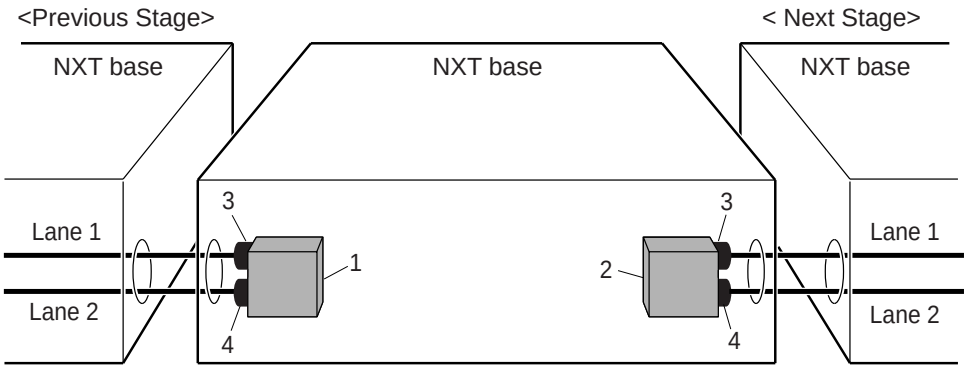

1. Previous stage panel loading I/F box
2. Next stage panel loading I/F box
3. Connector LANE1
4. Connector LANE2

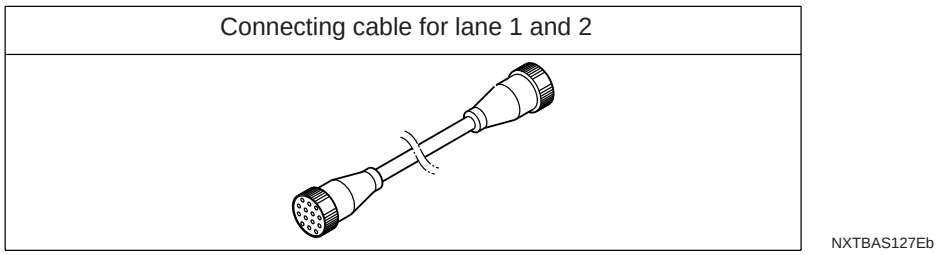

3.7.1 Connecting Method

⚠CAUTION

Be sure to turn off the power to the machine before connecting or removing any cables.

Ensure that the connector position is correct by checking the connector label when connecting connectors.

Be sure to firmly secure the connectors together.

1. Either open cover A at the front of the base, or remove cover B at the side of the base.

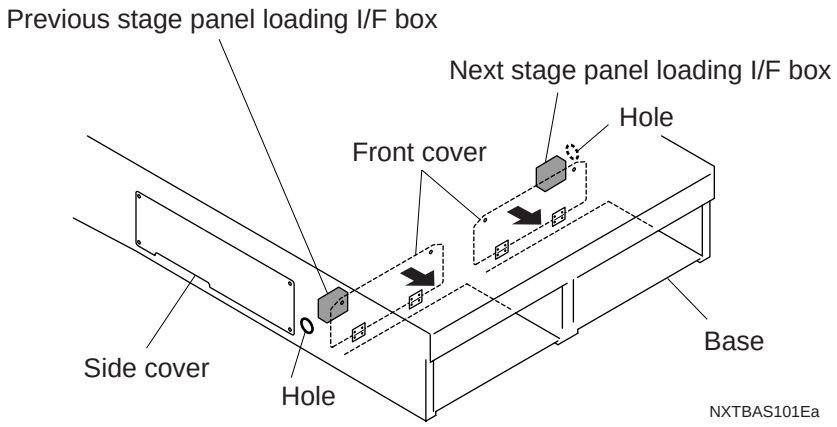

2. Connect the communication cables to the following connectors.
   - Connectors LANE1 and LANE2 of the previous stage panel loading I/F box.
   - Connectors LANE1 and LANE2 of the next stage panel loading I/F box.
3. Keep the connectors (RH0067* and RH0070*) attached to CN-M1 in the previous stage panel loading I/F box and CN-M2 in the next stage panel loading I/F box.

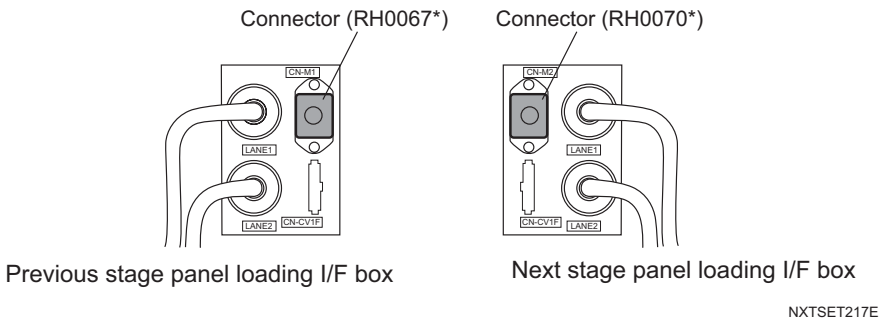

4. Pull out the connected cables (2 cables each for) from the hole at the side of the bases.

    - Connectors LANE1 and LANE2 of the panel loading I/F box in the previous stage machine.
    - Connectors LANE1 and LANE2 of the panel loading I/F box in the next stage machine.

3.7.2 Signal Cable Connecting Diagram (NXT - NXT - NXT)

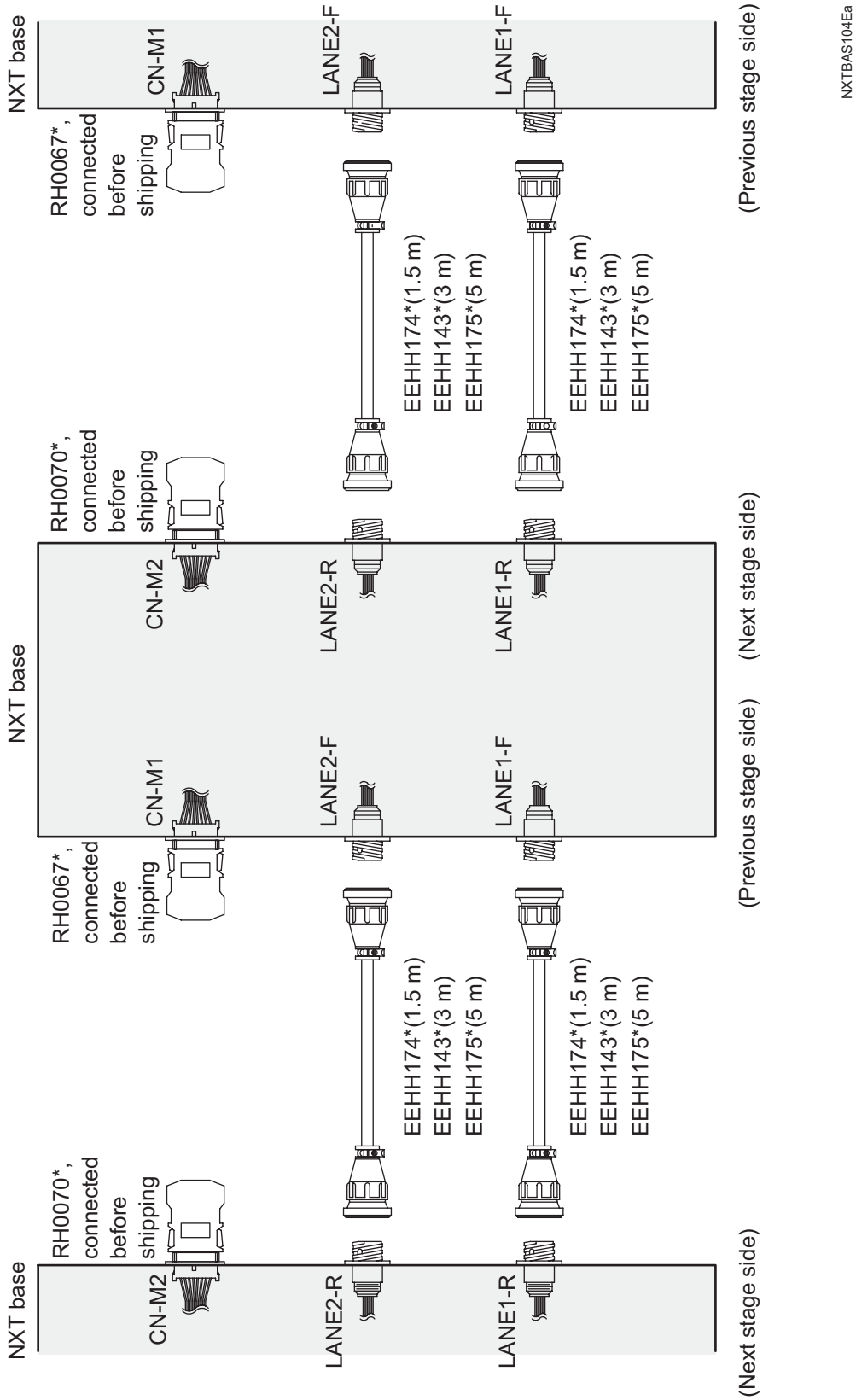

3.8 Installing Additional Dependent Bases

Follow this procedure to connect additional dependent NXT bases. Refer to section 3.7 "Connecting NXT Bases" for details of connecting independent NXT bases.

3.8.1 Extension Patterns

Select a method of extending the NXT configuration from one of the 10 patterns shown below. The configurations cannot be extended in a manner other than using these patterns.

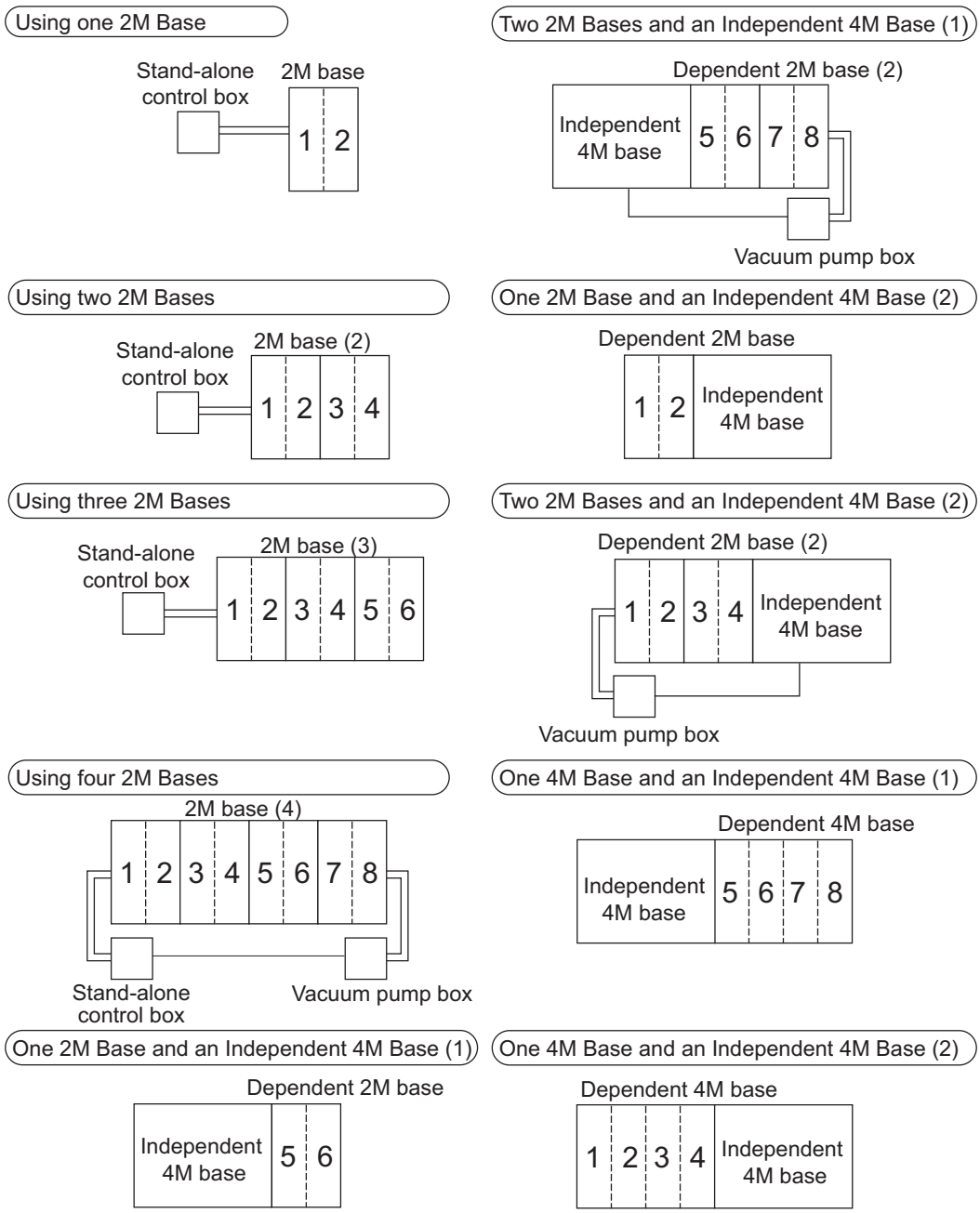

3.8.2 Pneumatic Connections

The type of pneumatic tube (as shown below) used, and number required to connect the air supply between bases differs depending on the base extension pattern used. Refer to the extension configuration for details of which type, and how many tubes are required.

T1-tube

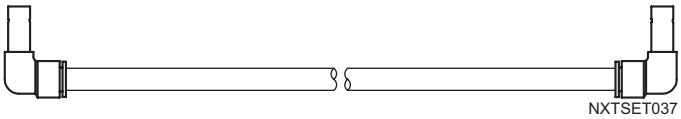

DWG. No.	Description	Qty.
PZ16570	Tube	2
A40687	Elbow	4

T2-tube

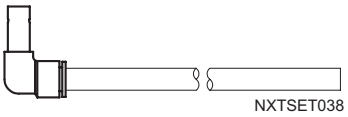

DWG. No.	Description	Qty.
PZ11190	Tube	2
A40687	Elbow	2

3.8.3 Using One 2M Base

Installing the Base

Carry out leveling, and then fasten the 2M bases to the floor at the positions shown in the following diagram.

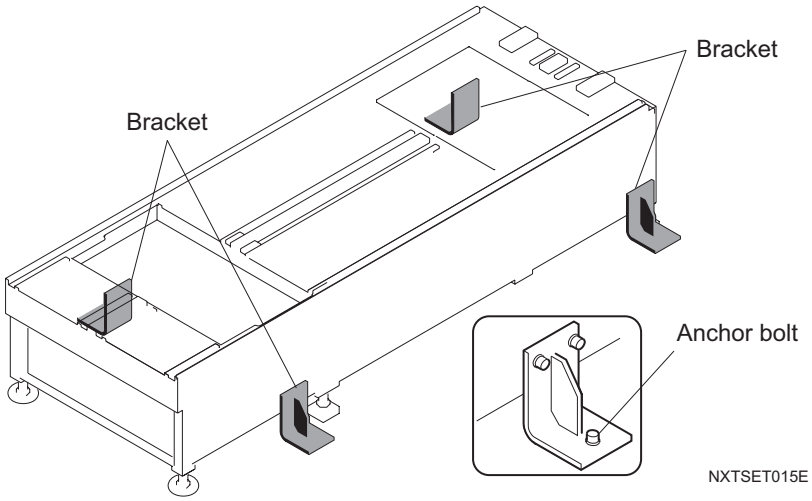

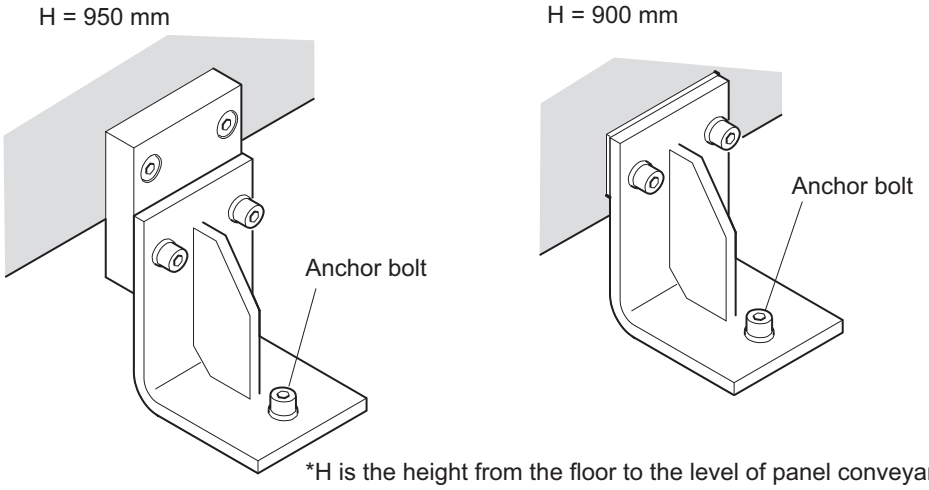

DWG. No.	Description	Qty.	Remarks
PB18723	Bracket	4	–
PB24701	Spacer	4	Not required on bases retrofitted for side cover interference prevention.
PB21792	Spacer	4	Required when the panel conveyance height is 950 mm.
H5123B	Anchor bolt	4	9-6-5-M10 (cut anchor)

Setting the Jumper and DIP Switches

Set the jumper switches and the DIP switches on the interface board and the remote I/O board in the base as shown in the diagram below. Refer to the "NXT Mechanical Reference" for details of the location of each board.

⚠CAUTION

Ensure the power to the machine is off before carrying out this procedure.

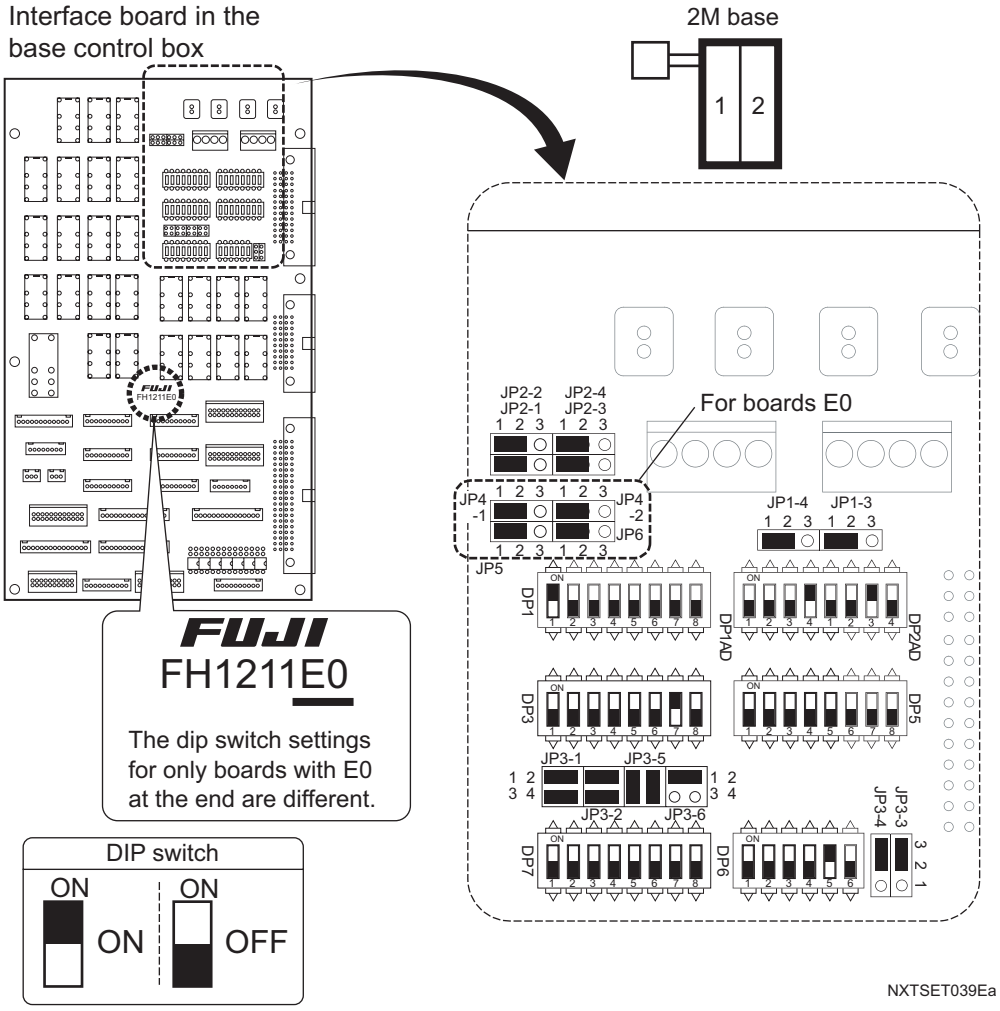

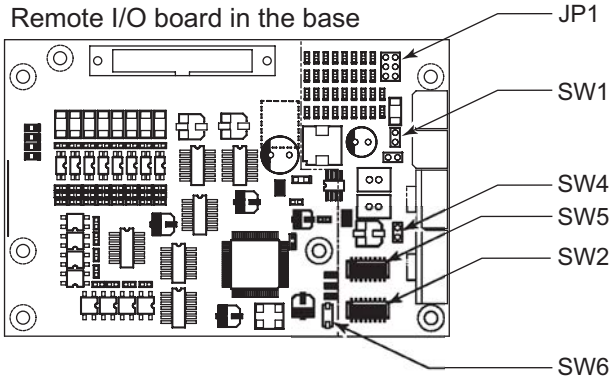

NXTSET040Ea

Base	JP1	SW1	SW2	SW4	SW5	SW6
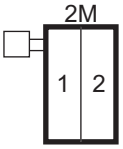	Open	Short		Short		

Signal Cable Connection Diagram (Stand-alone Control Box - 2M Base)

Connect each signal cable as shown in the following diagram.

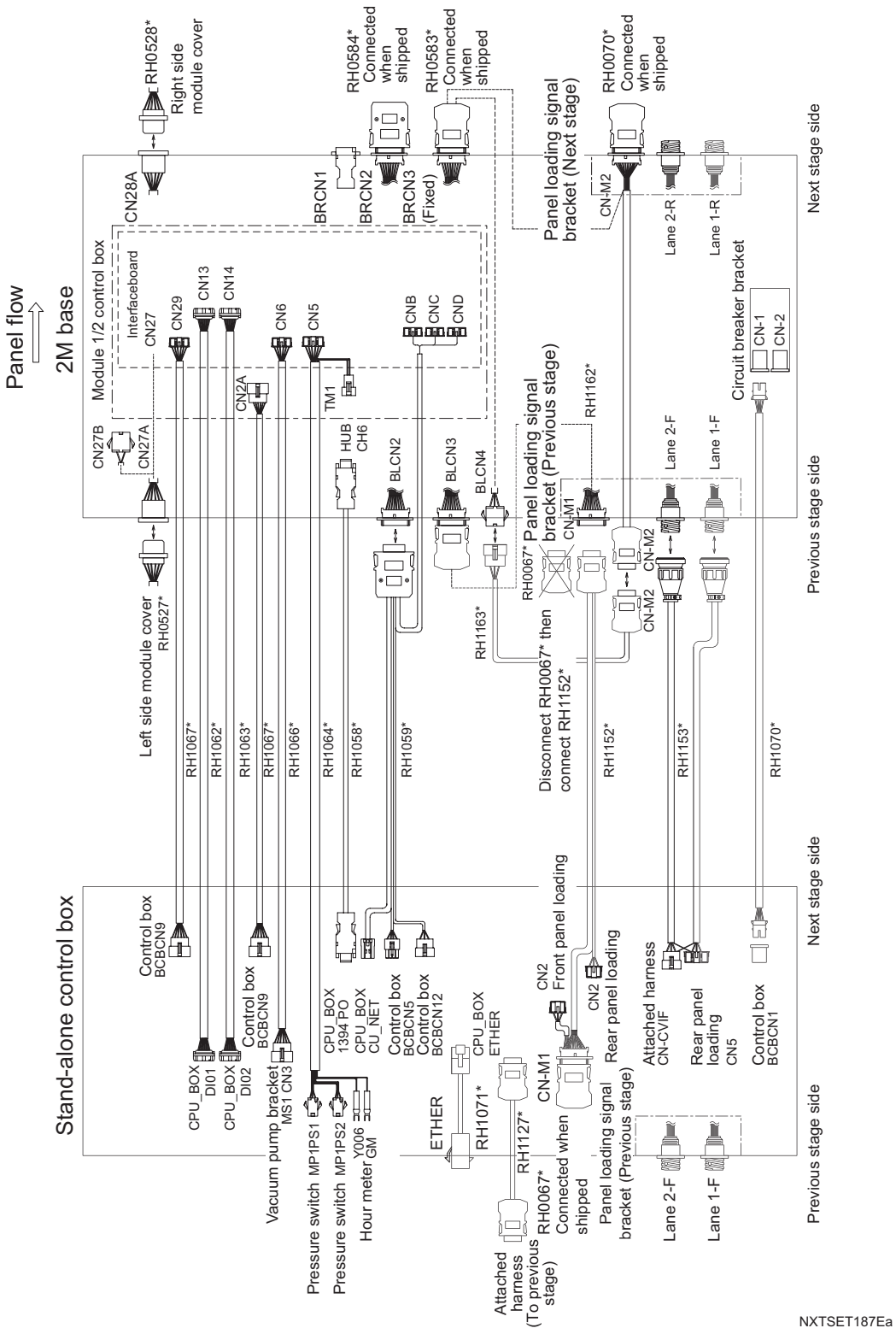

Pneumatic Connections

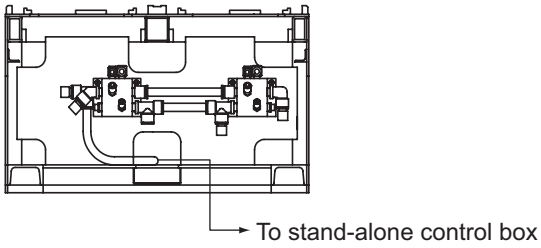

Front view (2M base)

NXTSET020E

3.8.4 Using Two 2M Bases

Setting the Jumper and DIP Switches

Set the jumper switches and the DIP switches on the interface board and the remote I/O board in the base as shown in the diagram below. Refer to the "NXT Mechanical Reference" for details of the location of each board.

⚠CAUTION

Ensure the power to the machine is off before carrying out this procedure.

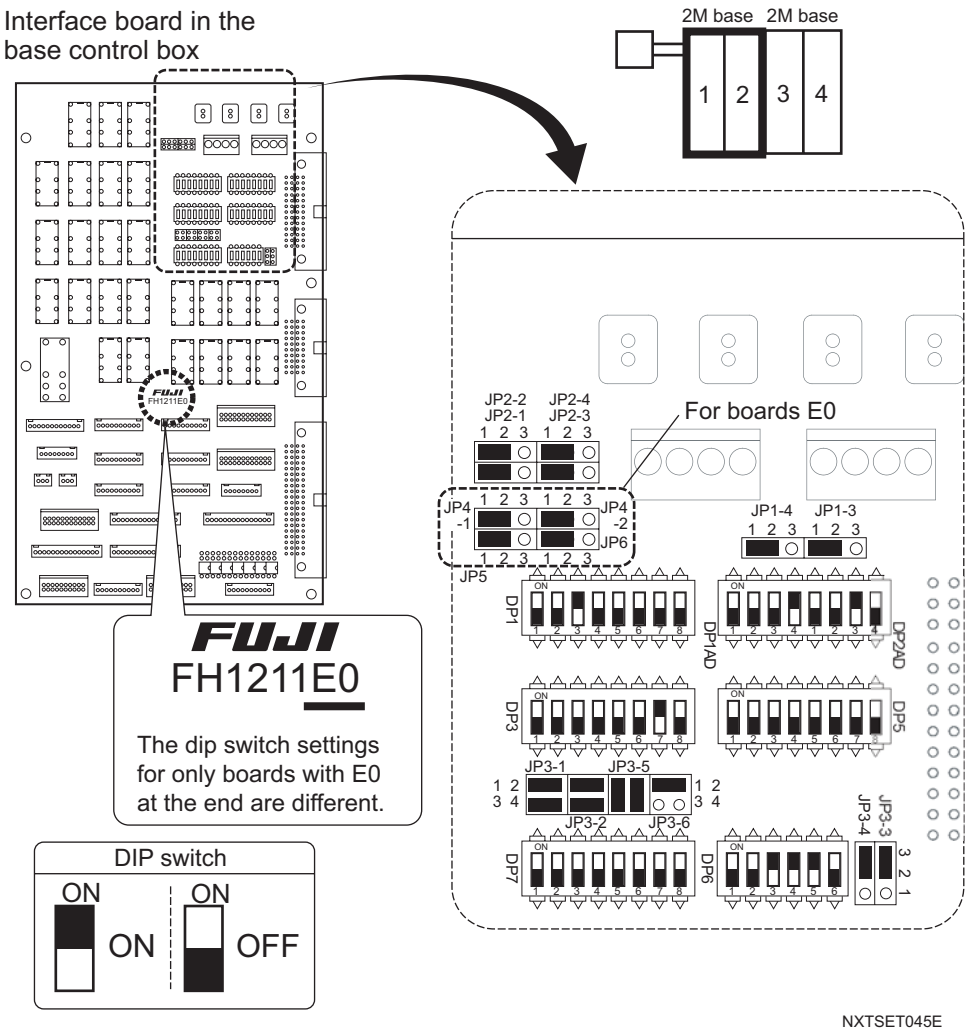

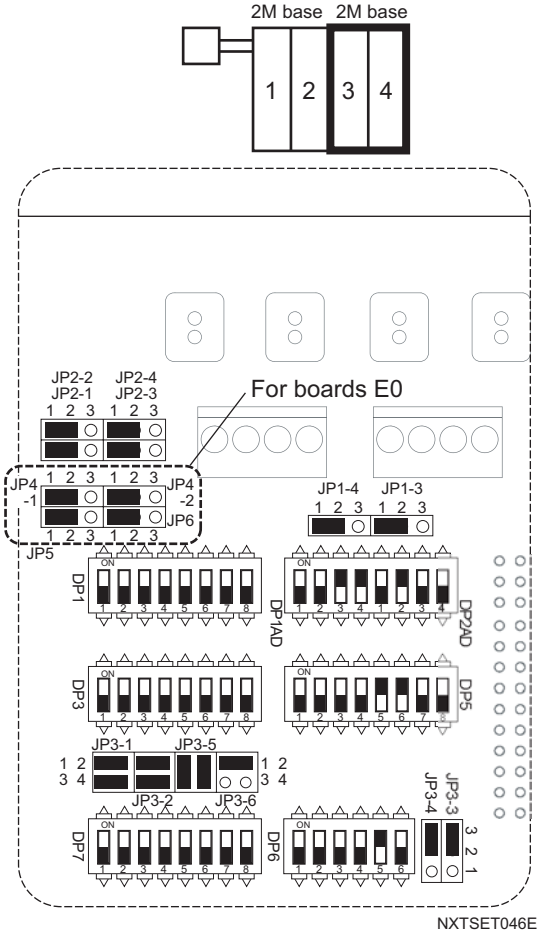
2M base
2M base
1
2
3
4
For boards E0
JP2-2
JP2-1
JP2-4
JP2-3
JP4
-1
JP4
-2
JP6
JP5
JP1-4
JP1-3
DP1
DP1AD
DP2AD
DP3
DP5
JP3-1
JP3-5
JP3-2
JP3-6
JP3-4
JP3-3
DP7
DP6
NXTSET046E

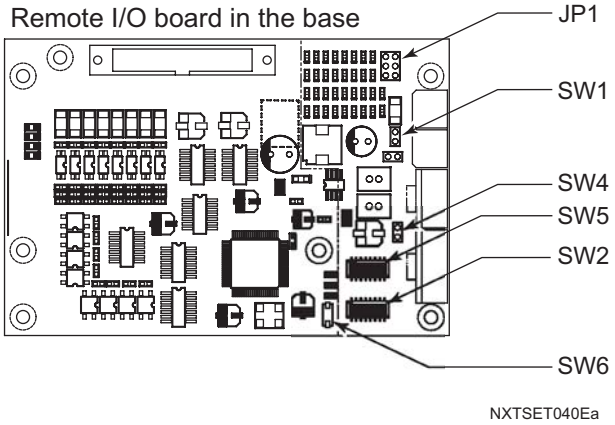
Remote I/O board in the base
JP1
SW1
SW4
SW5
SW2
SW6
NXTSET040Ea

Base	JP1	SW1	SW2	SW4	SW5	SW6
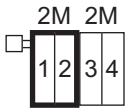	Open	Open	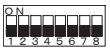	Short		
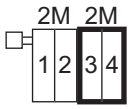	Open	Short	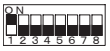	Short		

Signal Cable Connection Diagram (Stand-alone Control Box - 2M Base - 2M Base)

Connect each signal cable as shown in the following diagram.

*Note: Base connection harness AJ457** are shown in bold.*

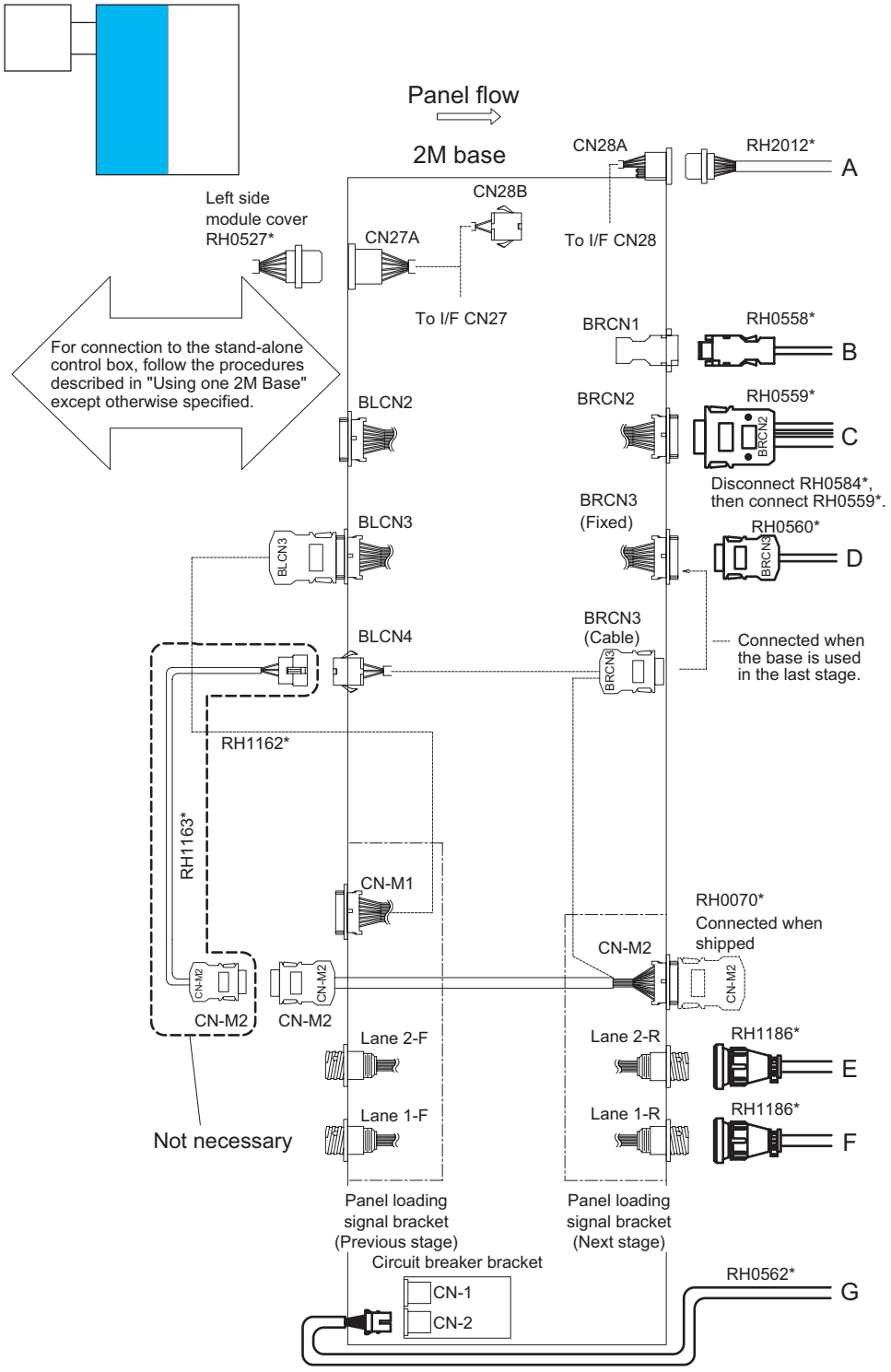

Stand-alone Control - 2M Base - 2M Base Harness Connection Diagram (1/2)

NXTSET188Ea

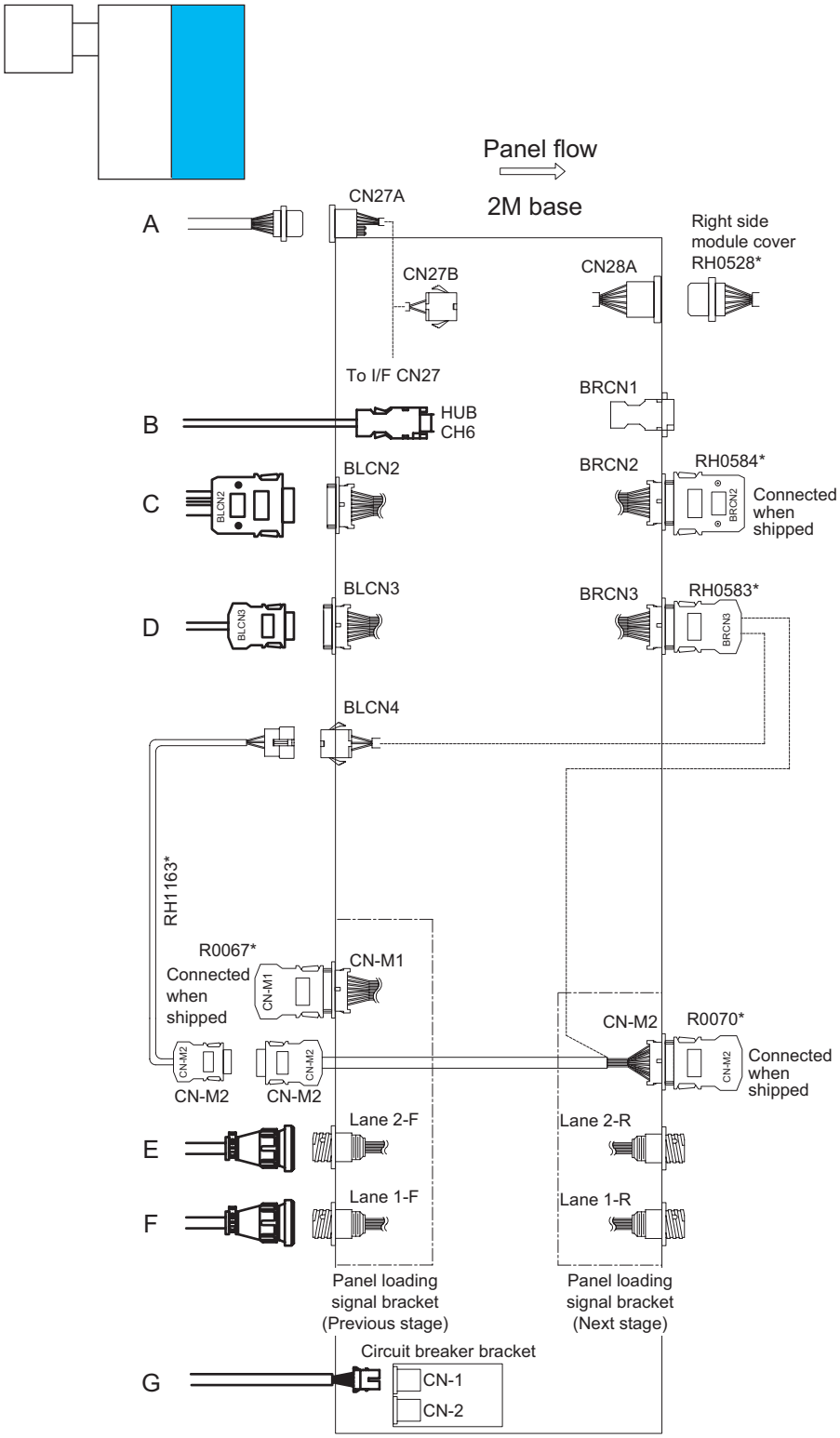

Stand-alone Control - 2M Base - 2M Base
Harness Connection Diagram (2/2)

NXTSET189Ea

Pneumatic Connections

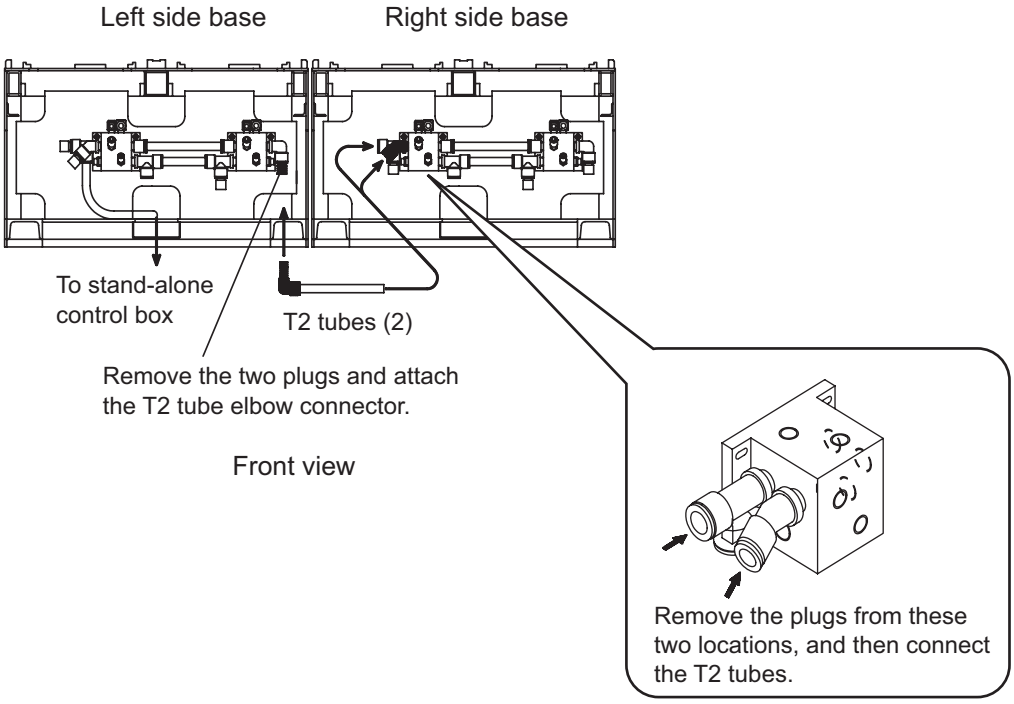

NXTSET021E

Connecting the Bases

After attaching the signal cables and pneumatic connections, fasten neighboring bases using the special bracket. Refer to section 3.8.13 "Fastening Extensions" for details.

3.8.5 Using Three 2M Bases

Setting the Jumper and DIP Switches

Set the jumper switches and the DIP switches on the interface board and the remote I/O board in the base as shown in the diagram below. Refer to the "NXT Mechanical Reference" for details of the location of each board.

⚠CAUTION

Ensure the power to the machine is off before carrying out this procedure.

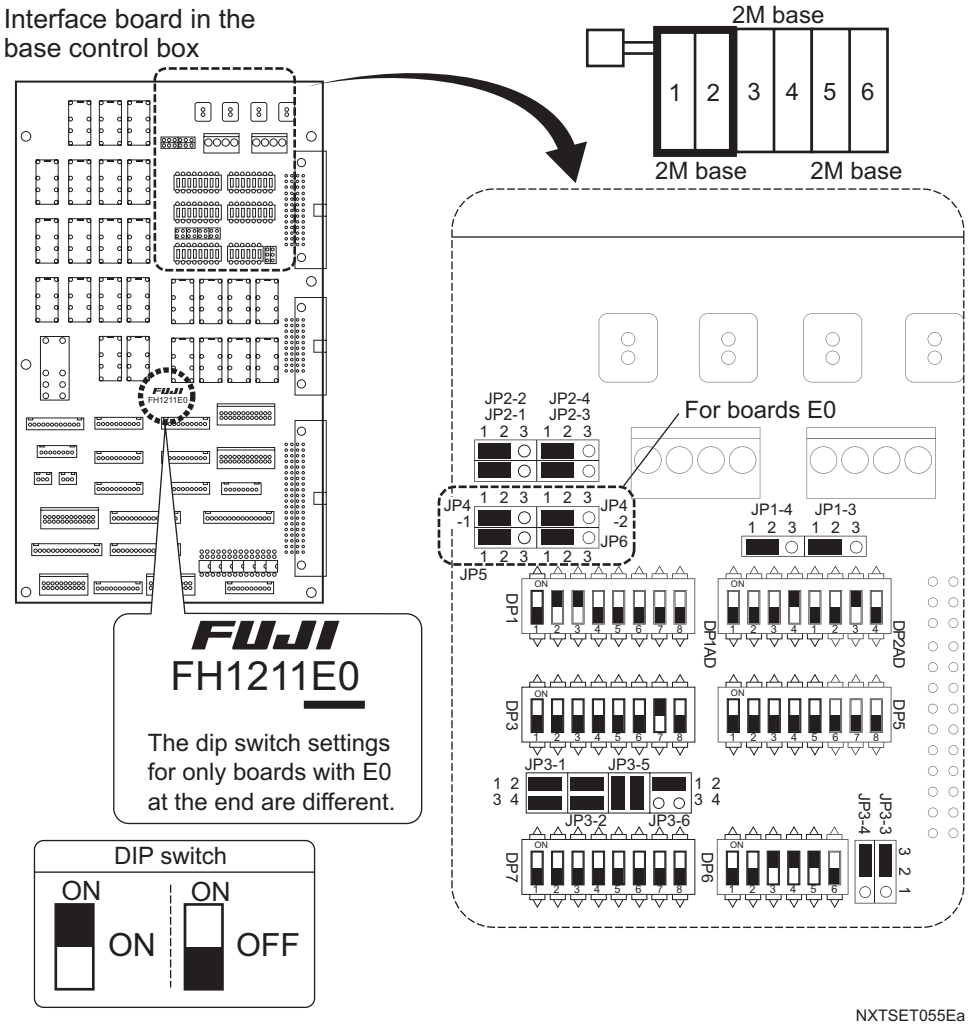

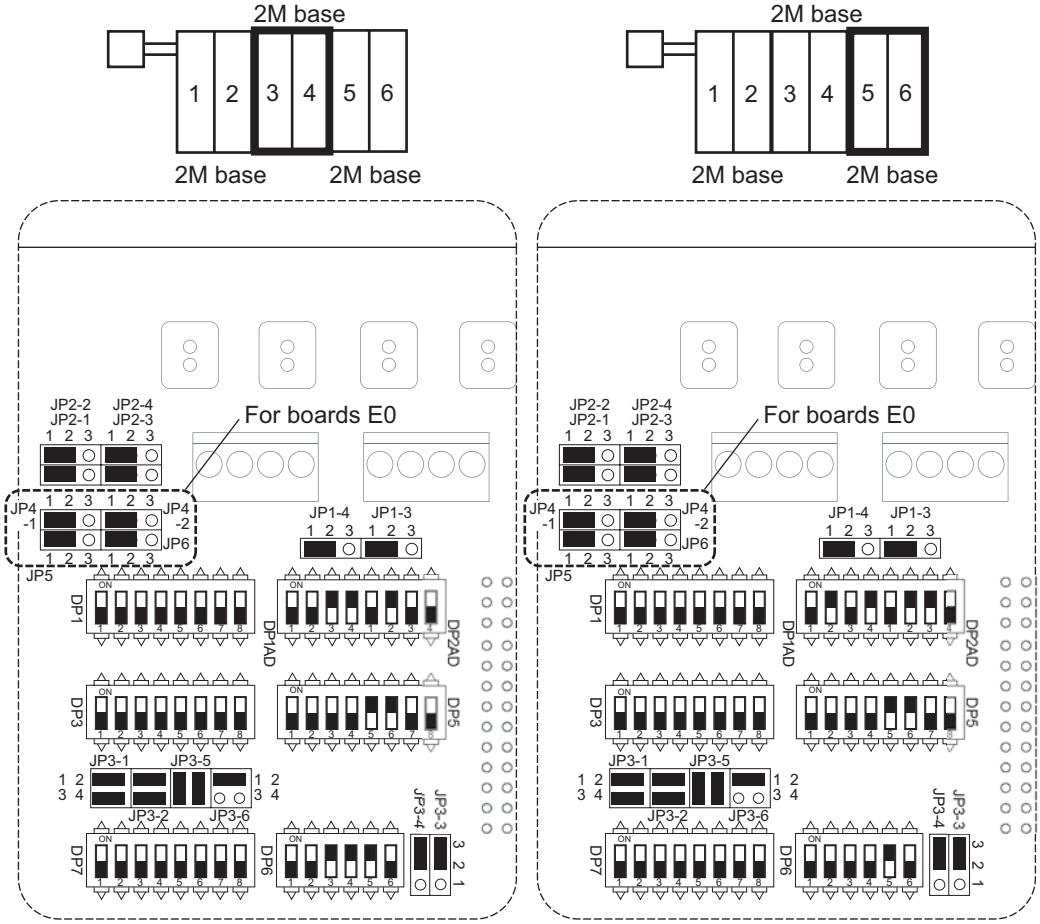
2M base
1 2 3 4 5 6
2M base 2M base
2M base
1 2 3 4 5 6
2M base 2M base
For boards E0
JP2-2 JP2-1
JP2-4 JP2-3
JP4 -1
JP4 -2
JP6
JP5
JP1-4 JP1-3
DP1
DP1AD
DP2AD
DP3
DP5
JP3-1 JP3-5
JP3-2 JP3-6
DP7
DP6
JP3-4 JP3-3
For boards E0
NXTSET056E

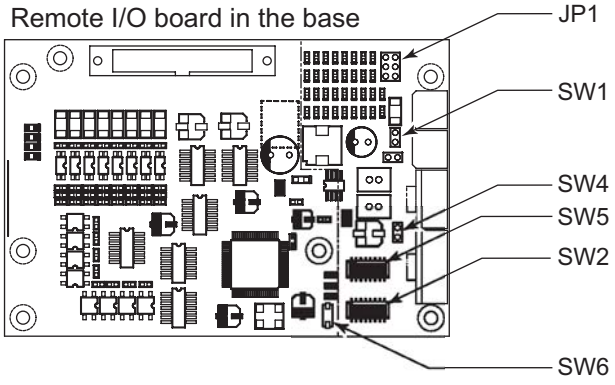
Remote I/O board in the base
JP1
SW1
SW4
SW5
SW2
SW6
NXTSET040Ea

Base	JP1	SW1	SW2	SW4	SW5	SW6
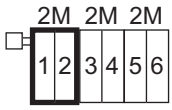	Open	Open	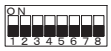	Short		
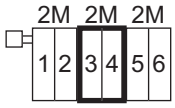	Open	Open		Short		
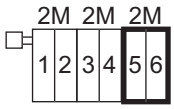	Open	Short		Short		

Signal Cable Connection Diagram (Stand-alone Control Box - 2M Base - 2M Base - 2M Base)

Connect each signal cable as shown in the following diagram.

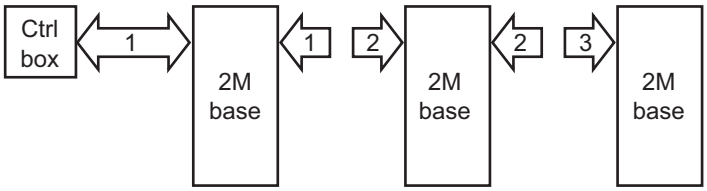

Base connection harness AJ457** requires two sets.

NXTSET190E

Diagram number reference	Connection diagram
1	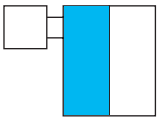 Connect the stand-alone control box and the first 2M base according to the connection diagram as shown on the page with this symbol in section 3.8.4 "Using Two 2M Bases".
2	Connect according to this connection diagram.
3	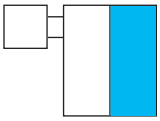 Connect the third 2M base according to the connection diagram as shown on the page with this symbol in section 3.8.4 "Using Two 2M Bases".

*Note: Base connection harness AJ457** are shown in bold.*

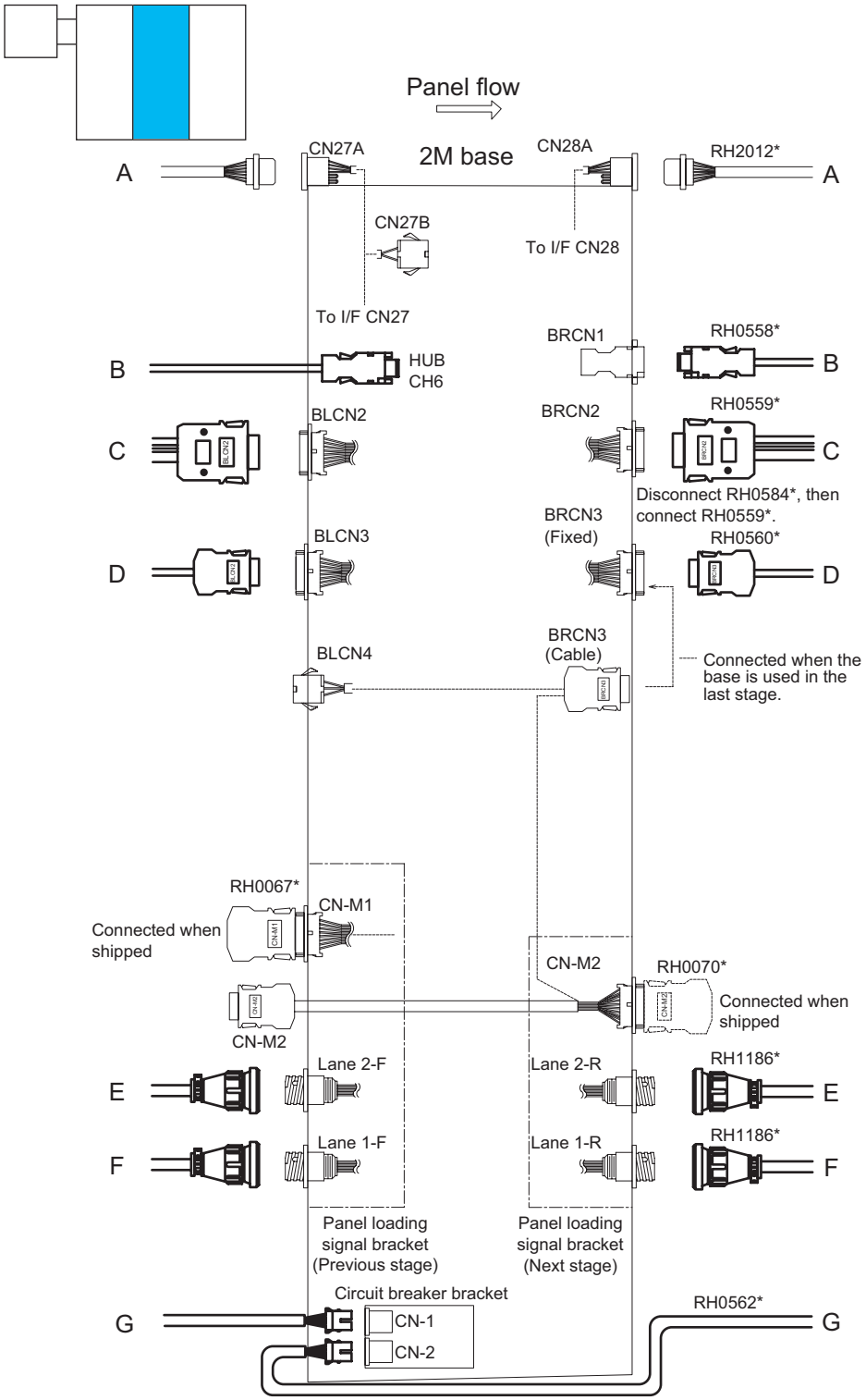

Stand-alone Control - 2M Base - 2M Base - 2M Base
Harness Connection Diagram

NXTSET193Ea

Pneumatic Connections

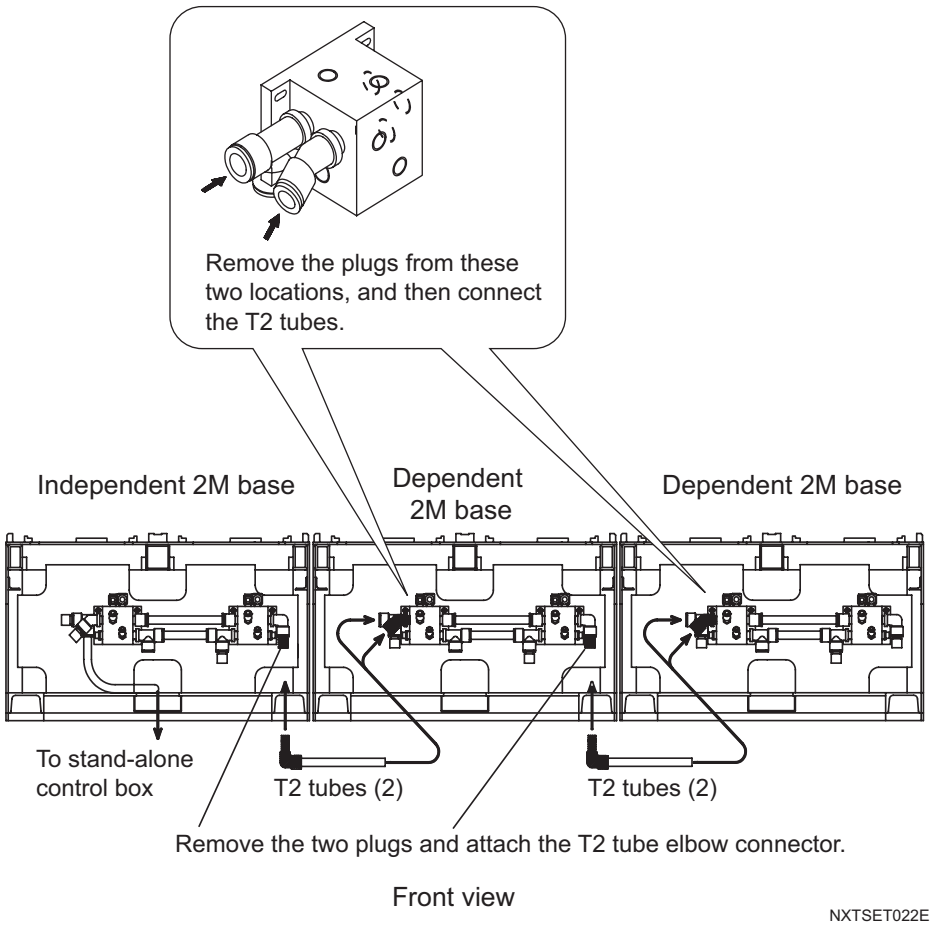

Connecting the Bases

After attaching the signal cables and pneumatic connections, fasten neighboring bases using the special bracket. Refer to section 3.8.13 "Fastening Extensions" for details.

3.8.6 Using Four 2M Bases

Setting the Jumper and DIP Switches

Set the jumper switches and the DIP switches on the interface board and the remote I/O board in the base as shown in the diagram below. Refer to the "NXT Mechanical Reference" for details of the location of each board.

⚠CAUTION

Ensure the power to the machine is off before carrying out this procedure.

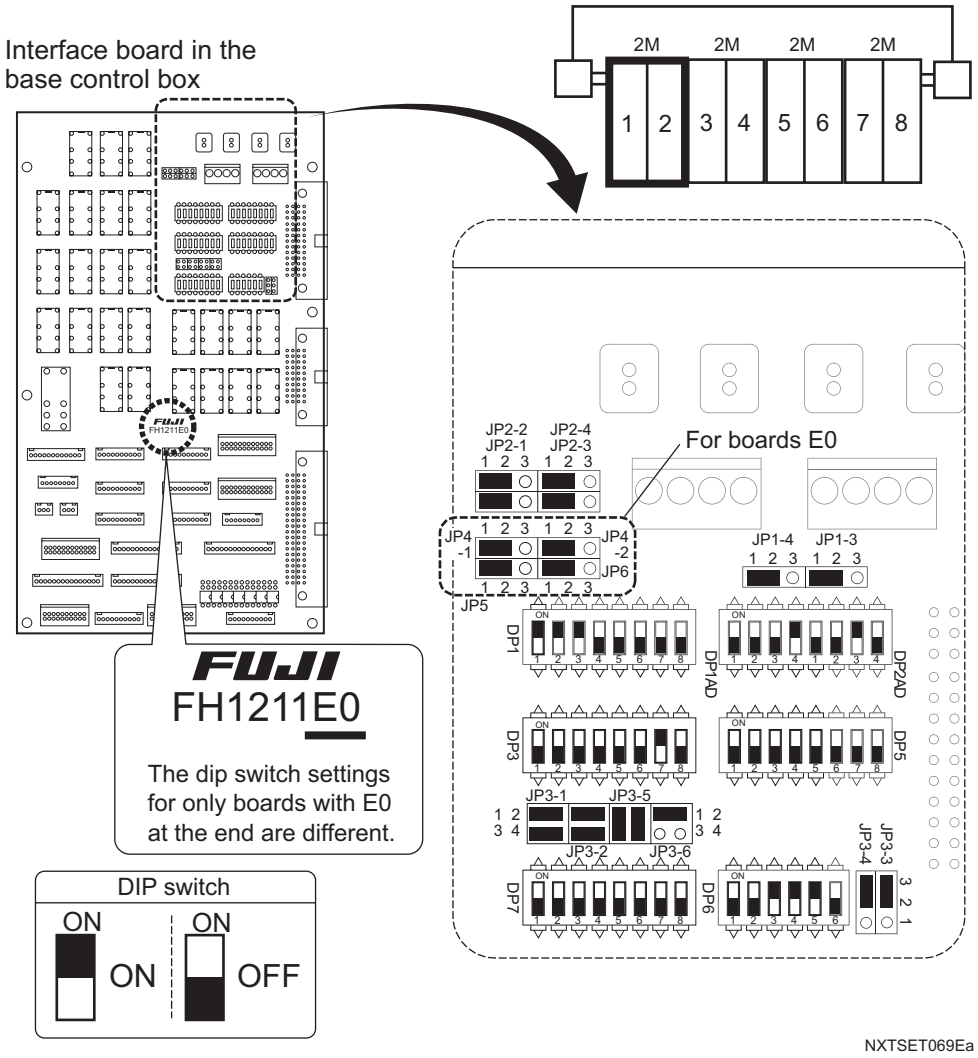

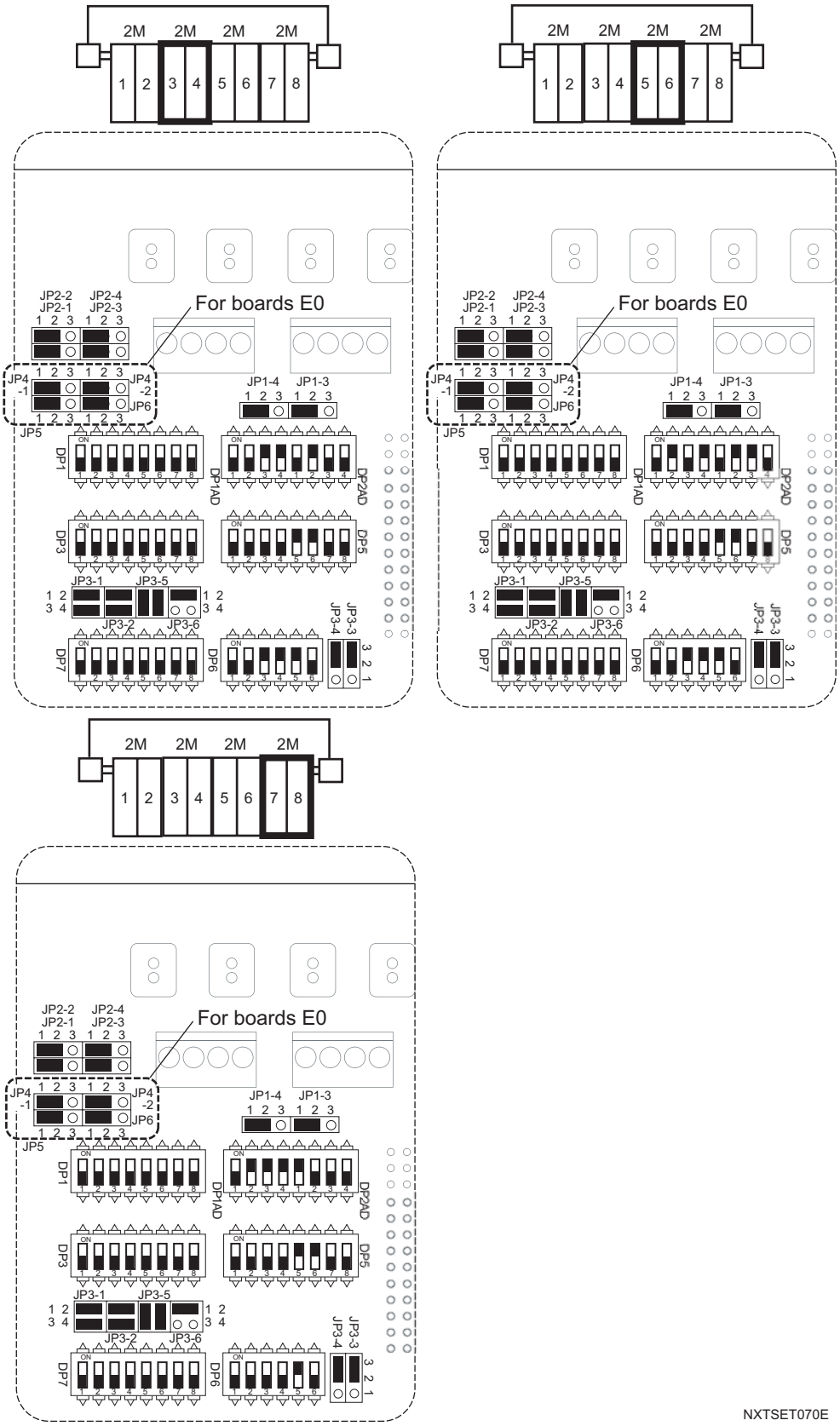
2M 2M 2M 2M
1 2 3 4 5 6 7 8
For boards E0
JP2-2 JP2-1
JP2-4 JP2-3
JP4 -1
JP4 -2
JP6
JP5
JP1-4 JP1-3
DP1
DP1AD
DP2AD
DP3
DP5
JP3-1 JP3-5
JP3-2 JP3-6
DP7
DP6
JP3-4 JP3-3
NXTSET070E

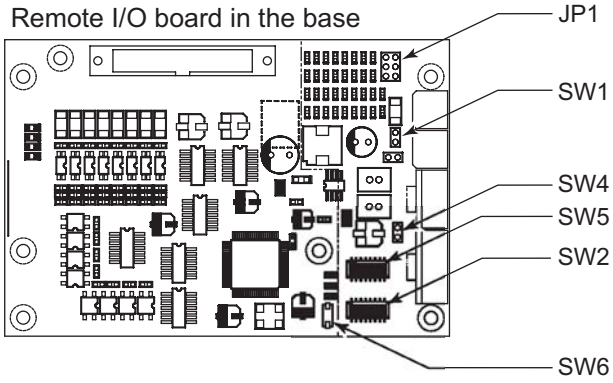

NXTSET040Ea

Base	JP1	SW1	SW2	SW4	SW5	SW6
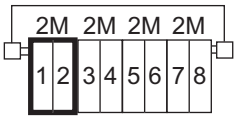	Open	Open		Short		
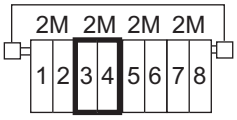	Open	Open		Short		
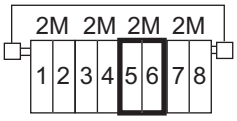	Open	Open		Short		
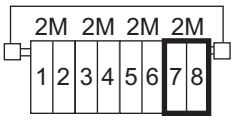	Open	Short		Short		

Signal Cable Connection Diagram (Vacuum Pump Box - Stand-alone Control Box - 2M Base - 2M Base - 2M Base - 2M Base)

Connect each signal cable as shown in the following diagram.

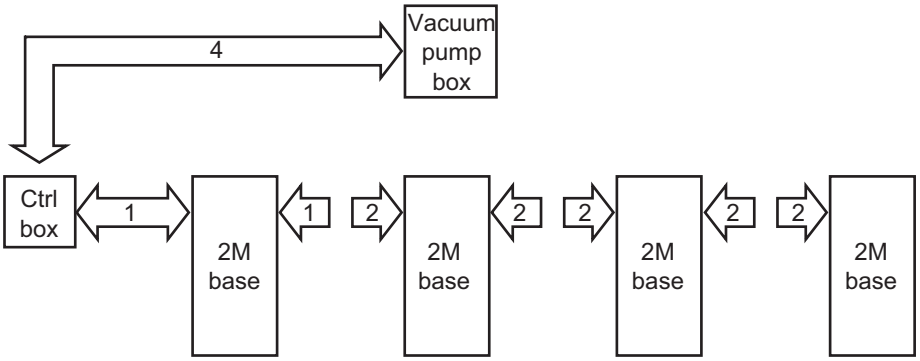

Base connection harness AJ457** requires three sets.

NXTSET194E

Diagram number reference	Connection diagram
1	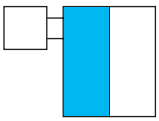 Connect the stand-alone control box and the first 2M base according to the connection diagram as shown on the page with this symbol in section 3.8.4 "Using Two 2M Bases".
2	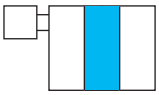 Connect the second and third 2M base according to the connection diagram as shown on the page with this symbol in section 3.8.5 "Using Three 2M Bases".
3	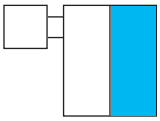 Connect the fourth 2M base according to the connection diagram as shown on the page with this symbol in section 3.8.4 "Using Two 2M Bases".
4	Connect the stand-alone control box and the vacuum pump box according to the connection diagram of this item. Do not pass the harness for the vacuum pump box (RH2141*, RH2142*, RH2143*) through the interior of the base. The harness should be installed along the outside of the base.

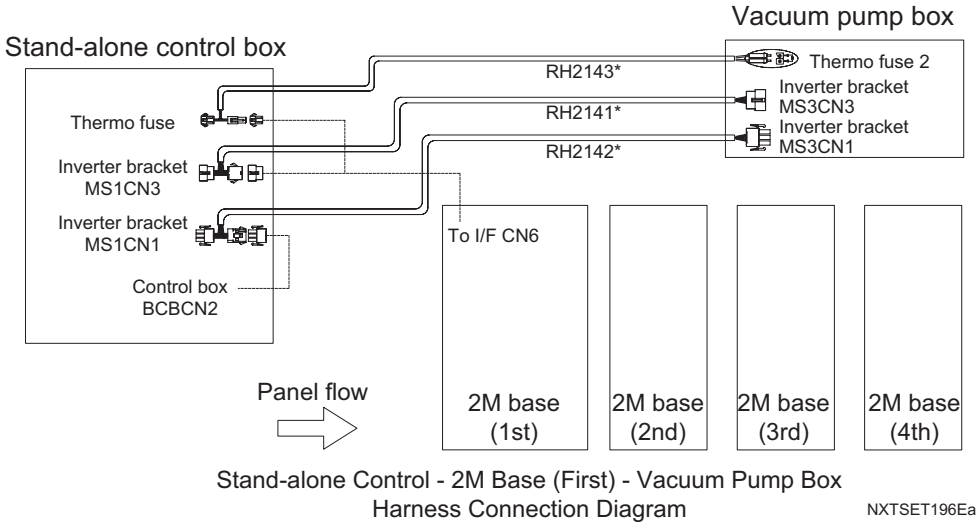

Stand-alone Control - 2M Base (First) - Vacuum Pump Box
Harness Connection Diagram

NXTSET196Ea

Pneumatic Connections

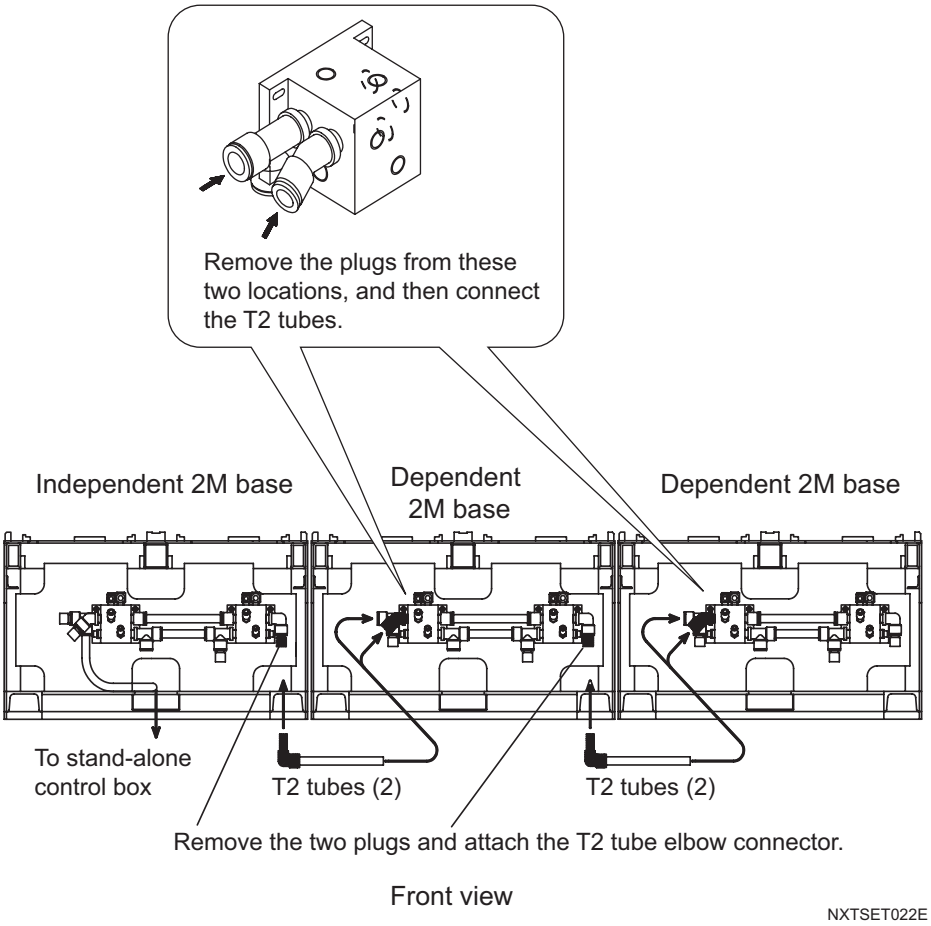

NXTSET022E

Connecting the Bases

After attaching the signal cables and pneumatic connections, fasten neighboring bases using the special bracket. Refer to section 3.8.13 "Fastening Extensions" for details.

3.8.7 Using One 2M Base and an Independent 4M Base (1)

Setting the Jumper and DIP Switches

Set the jumper switches and the DIP switches on the interface board and the remote I/O board in the base as shown in the diagram below. Refer to the "NXT Mechanical Reference" for details of the location of each board.

⚠CAUTION

Ensure the power to the machine is off before carrying out this procedure.

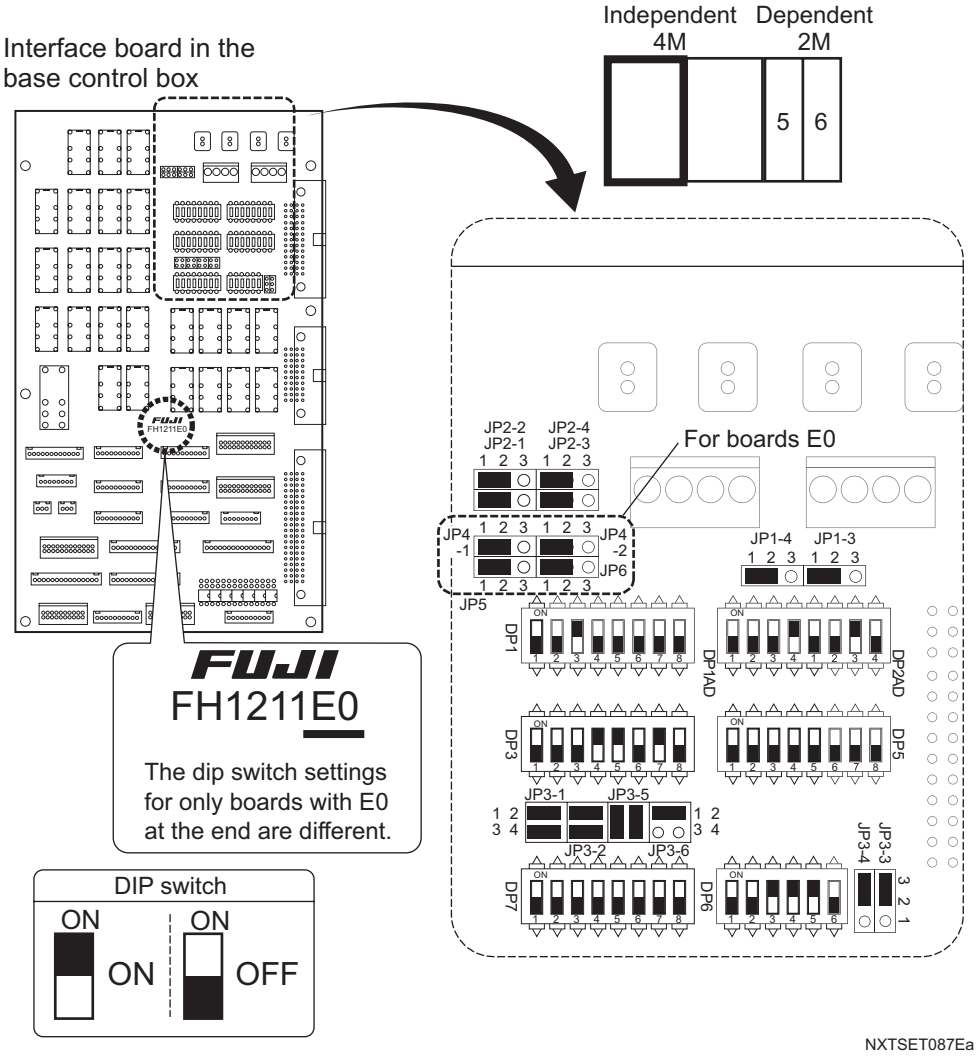

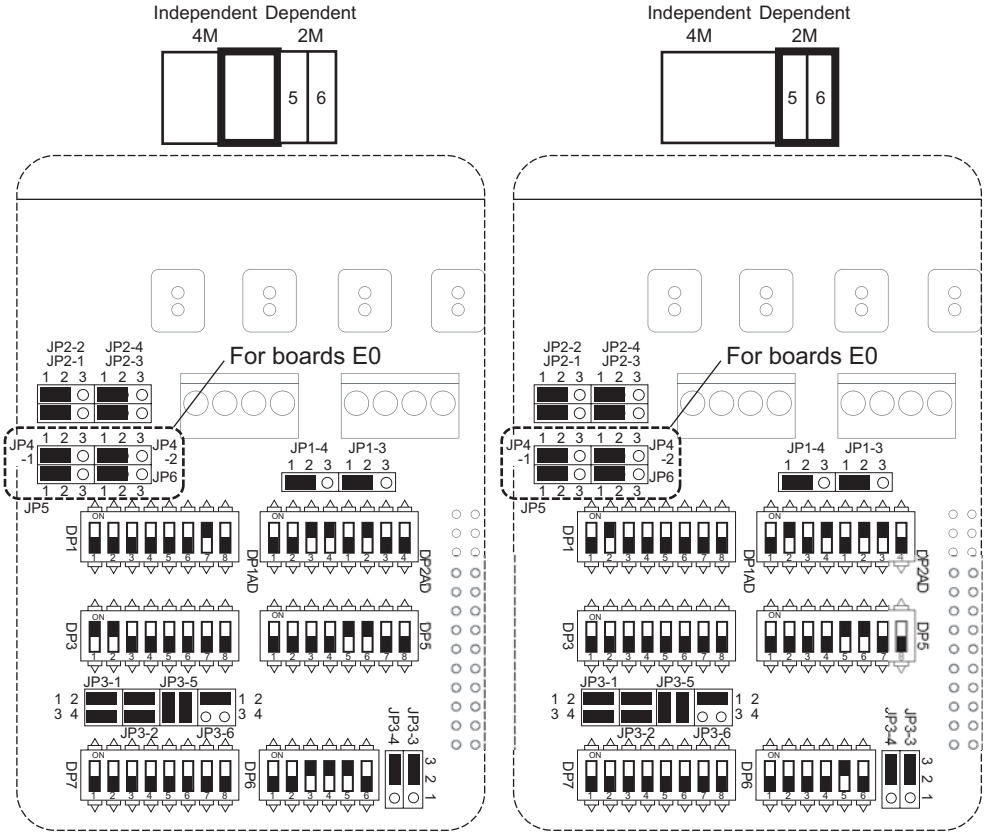
Independent Dependent
4M 2M
5 6
For boards E0
JP2-2 JP2-4
JP2-1 JP2-3
JP4 -1
JP4 -2
JP6
JP5
JP1-4 JP1-3
DP1
DP1AD
DP2AD
DP3
DP5
JP3-1 JP3-5
JP3-2 JP3-6
JP3-4 JP3-3
DP7
DP6
NXTSET088E

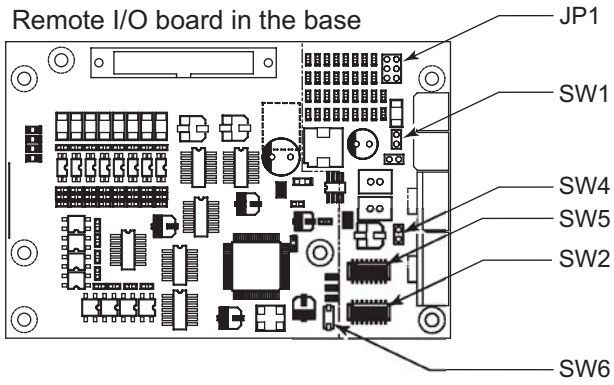
Remote I/O board in the base
JP1
SW1
SW4
SW5
SW2
SW6
NXTSET040Ea

Base	JP1	SW1	SW2	SW4	SW5	SW6
Independent 4M Dependent 2M 5 6	Open	Open		Short		
Independent 4M Dependent 2M 5 6	Open	Open		Short		
Independent 4M Dependent 2M 5 6	Open	Short		Short		

Signal Cable Connection Diagram (Independent 4M Base - 2M Base)

Connect each signal cable as shown in the following diagram.

*Note: Base connection harness AJ110** are shown in bold.*

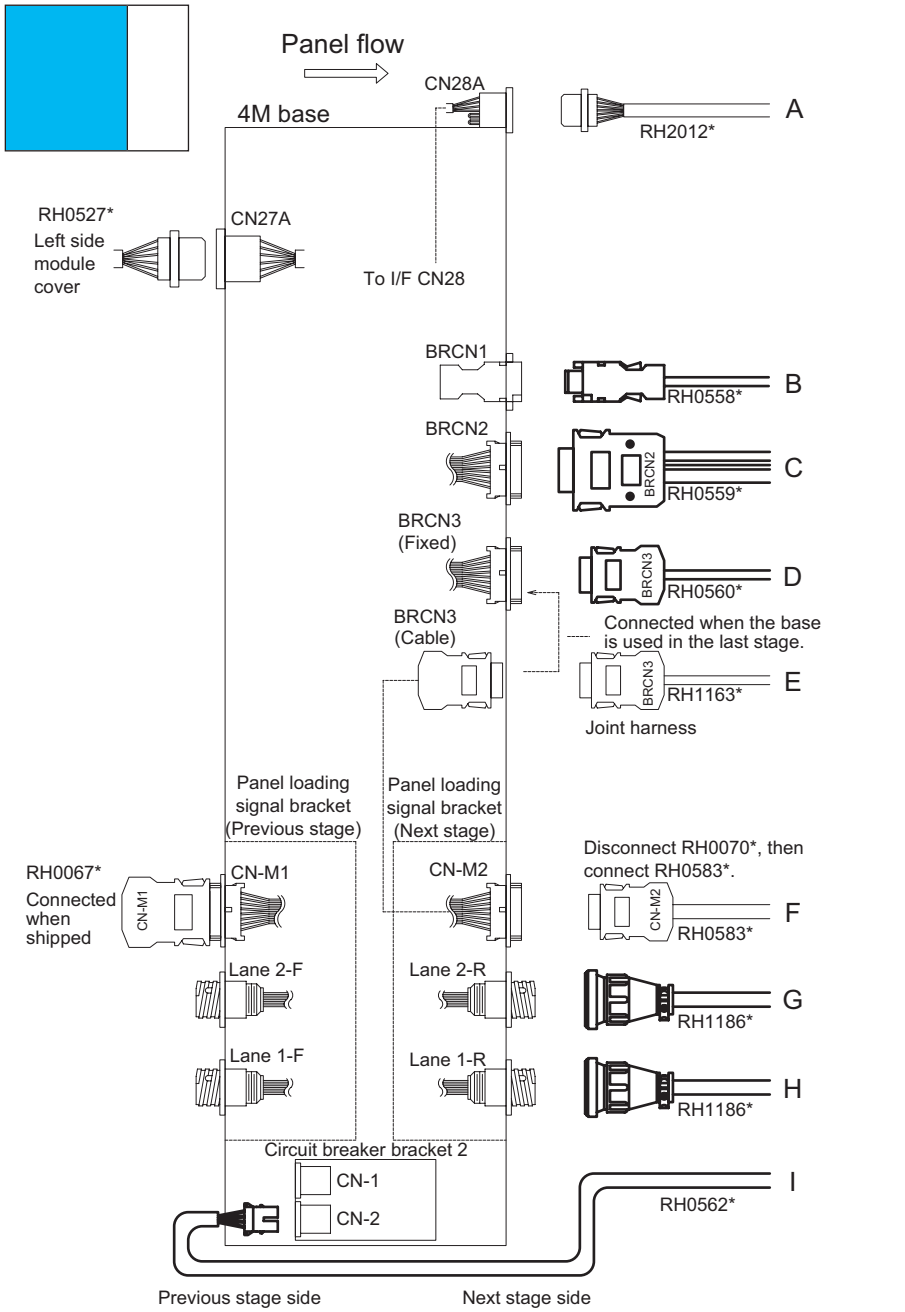

4M Base - 2M Base Harness Connection Diagram (1/2)

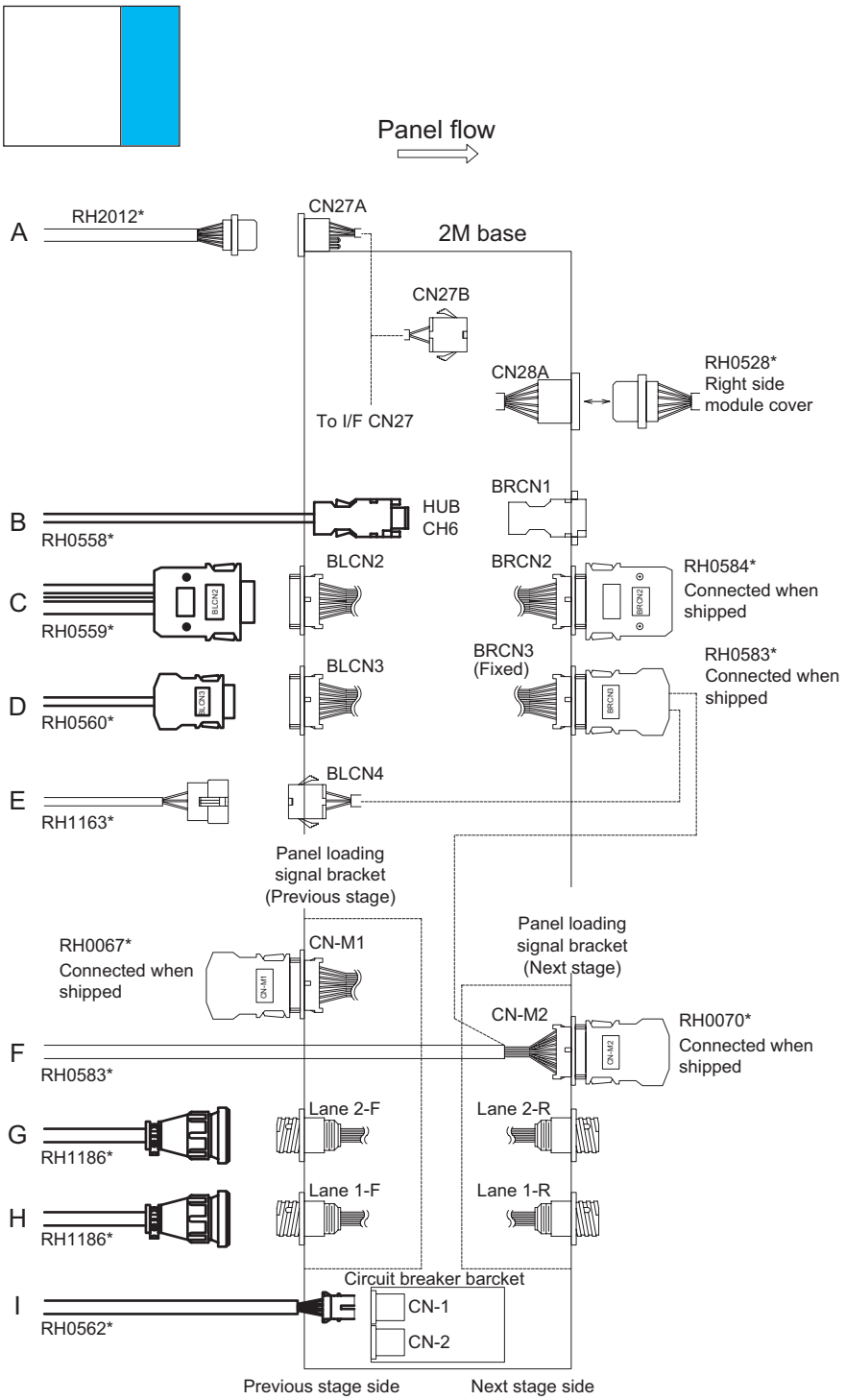

4M Base - 2M Base Harness Connection Diagram (2/2)

NXTSET198Ea

Pneumatic Connections

<For the Independent 4M Base (serial No. up to 294)>

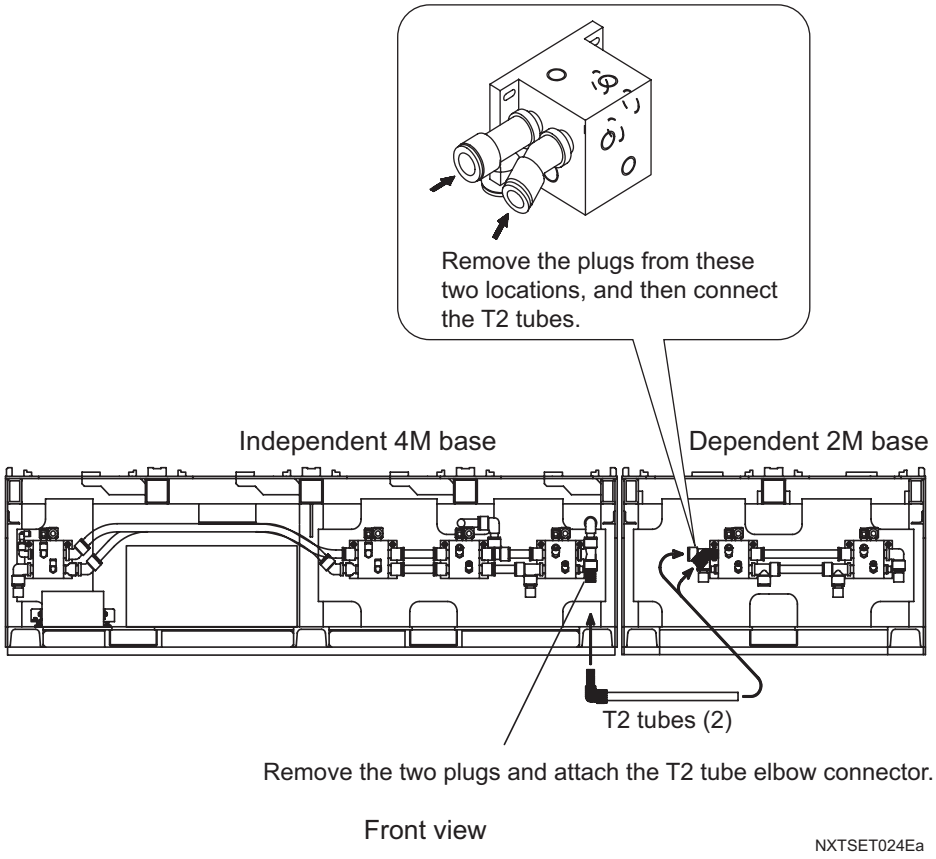

<For the Independent 4M Base (serial No. 295 and later)>

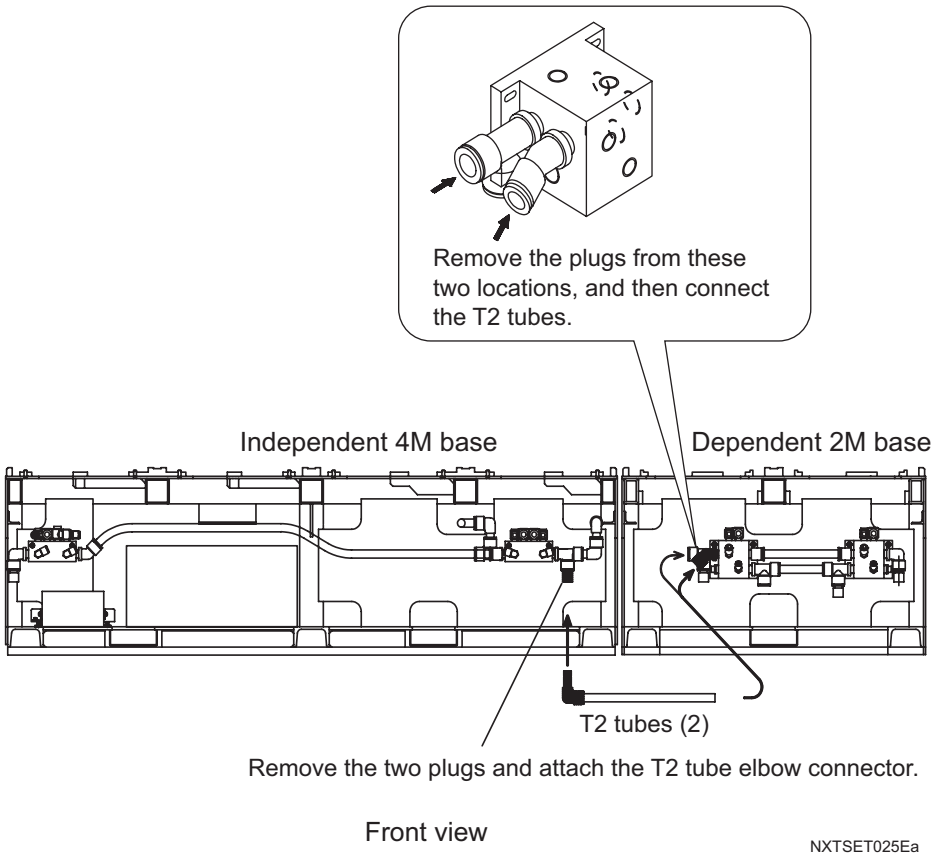

Connecting the Bases

After attaching the signal cables and pneumatic connections, fasten neighboring bases using the special bracket. Refer to section 3.8.13 "Fastening Extensions" for details.

3.8.8 Using Two 2M Bases and an Independent 4M Base (1)

Setting the Jumper and DIP Switches

Set the jumper switches and the DIP switches on the interface board and the remote I/O board in the base as shown in the diagram below. Refer to the "NXT Mechanical Reference" for details of the location of each board.

⚠CAUTION

Ensure the power to the machine is off before carrying out this procedure.

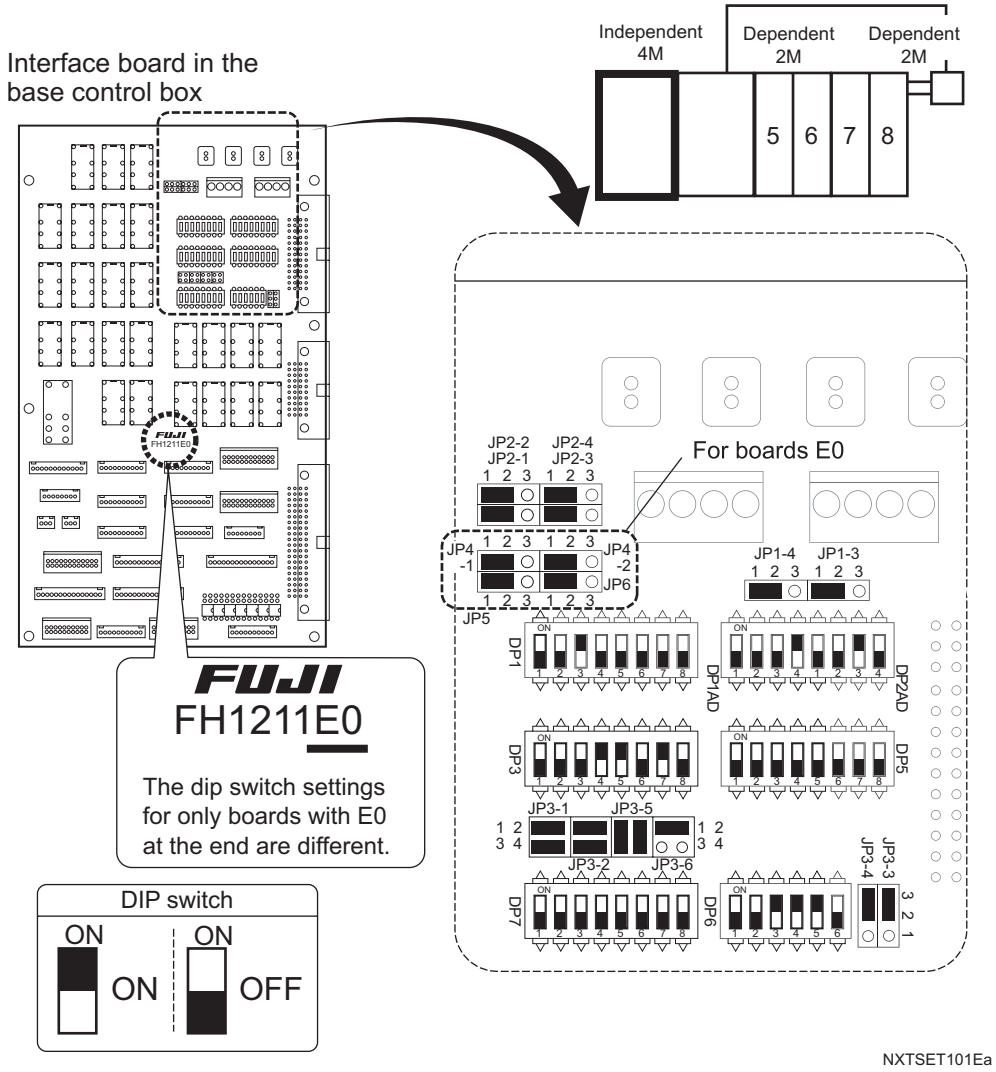

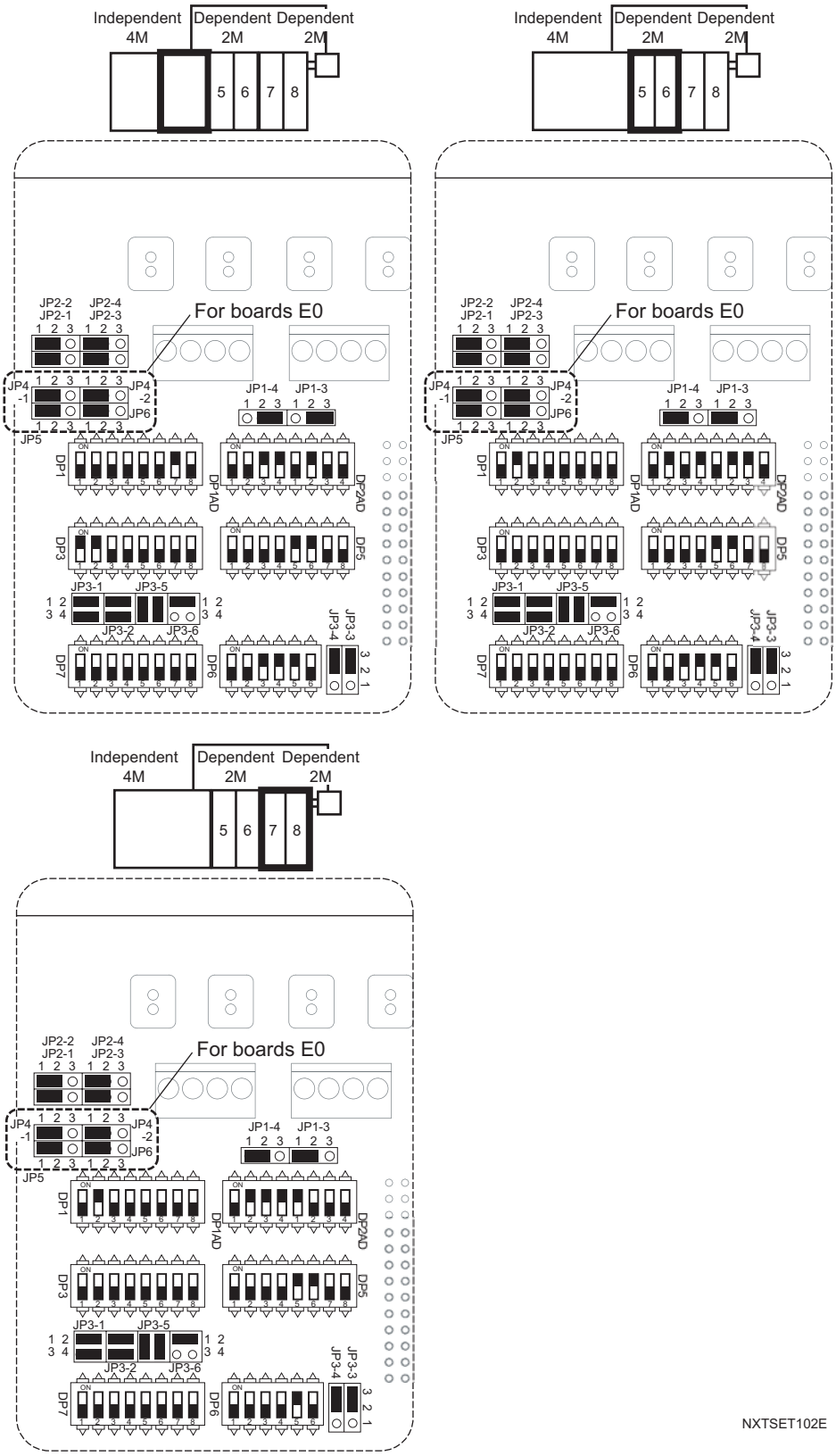
Independent 4M
Dependent 2M
Dependent 2M
5 6 7 8
For boards E0
JP2-2 JP2-1
JP2-4 JP2-3
JP4 -1
JP4 -2
JP6
JP5
JP1-4 JP1-3
DP1
DP1AD
DP2AD
DP3
DP5
JP3-1 JP3-5
JP3-2 JP3-6
DP7
DP6
JP3-4 JP3-3
NXTSET102E

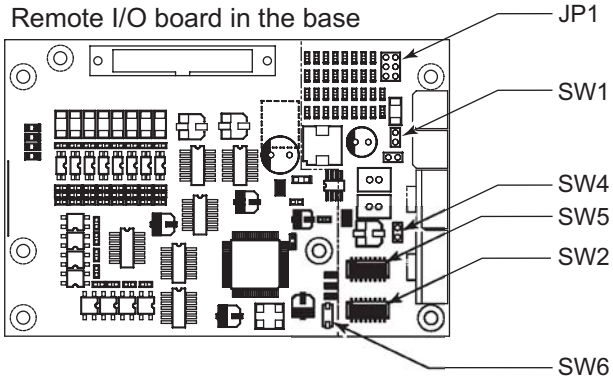

NXTSET040Ea

Base	JP1	SW1	SW2	SW4	SW5	SW6
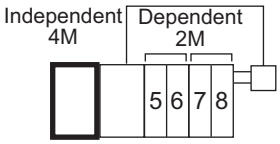	Open	Open		Short		
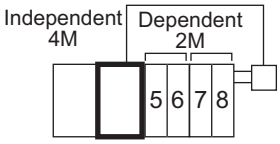	Open	Open	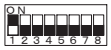	Short		
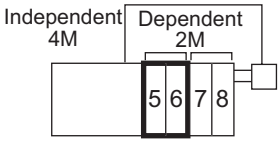	Open	Open	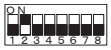	Short		
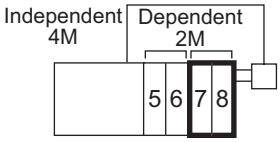	Open	Short		Short		

Signal Cable Connection Diagram (Independent 4M Base - 2M Base - 2M Base)

Connect each signal cable as shown in the following diagram.

*Note: Two sets of base connection harnesses AJ110** are shown in bold.*

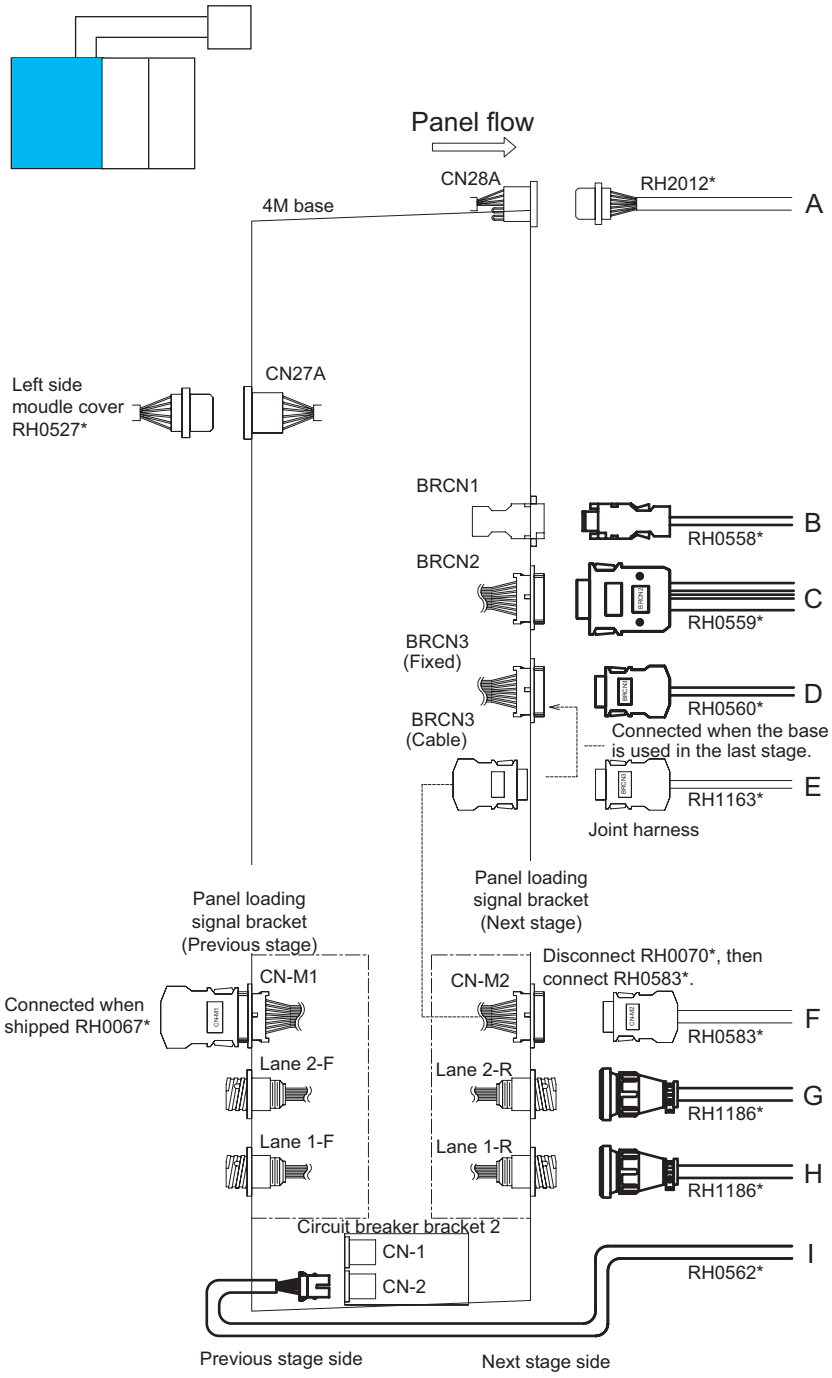

4M Base - 2M Base - 2M Base Harness Connection Diagram (1/4)

NXTSET199Ea

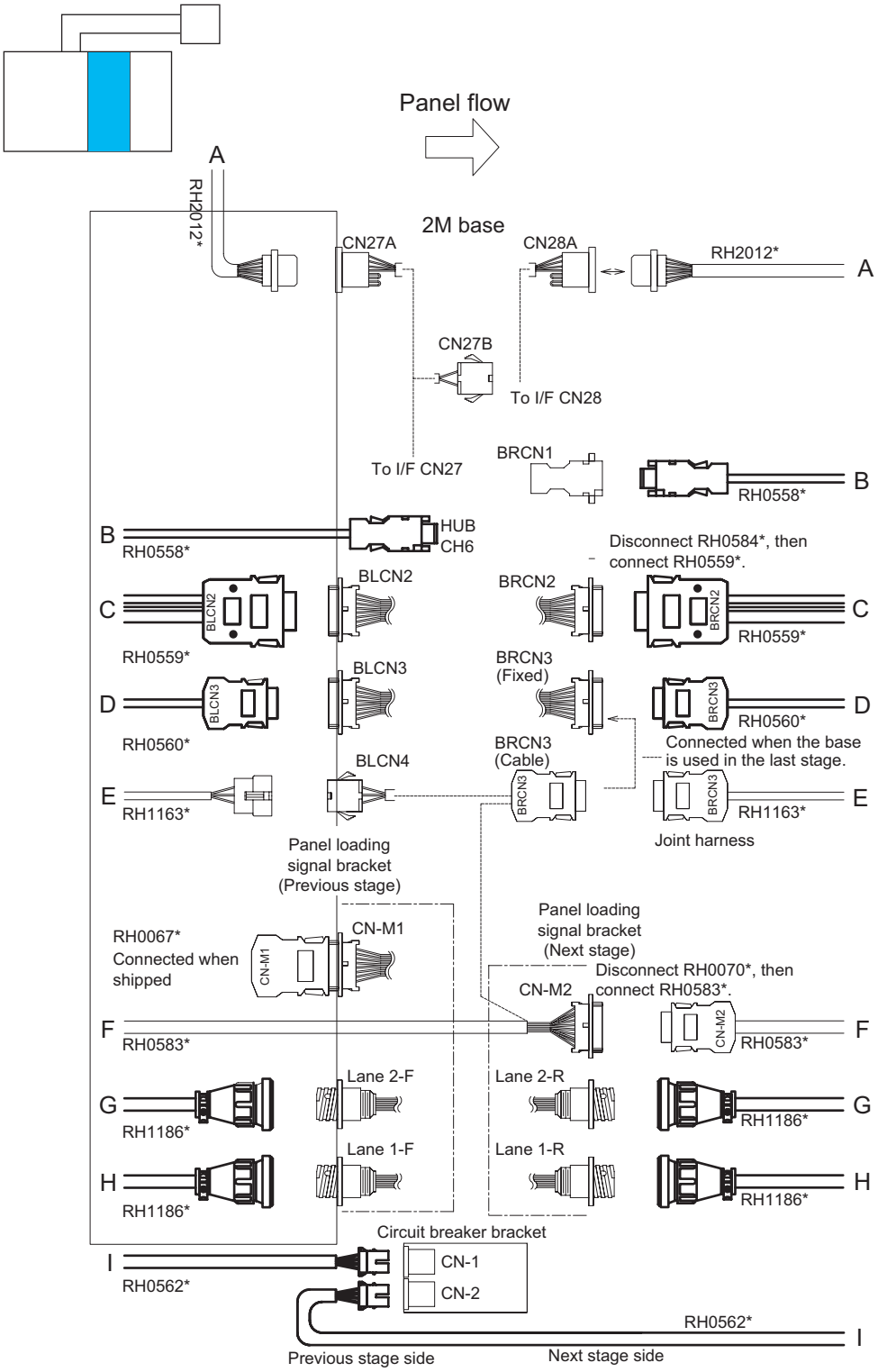

4M Base - 2M Base - 2M Base Harness Connection Diagram (2/4)

NXTSET200Ea

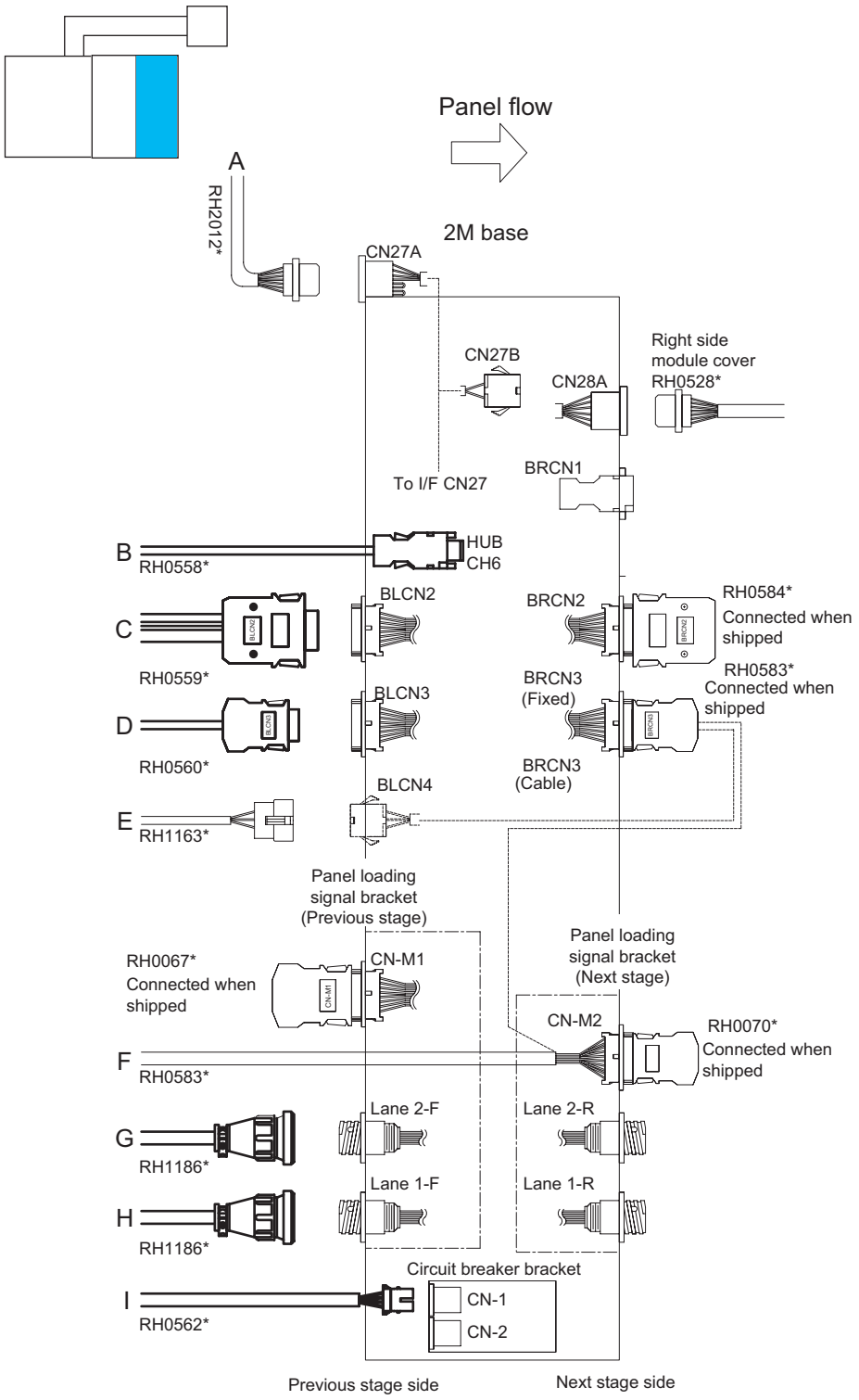

4M Base - 2M Base - 2M Base Harness Connection Diagram (3/4)

NXTSET201Ea

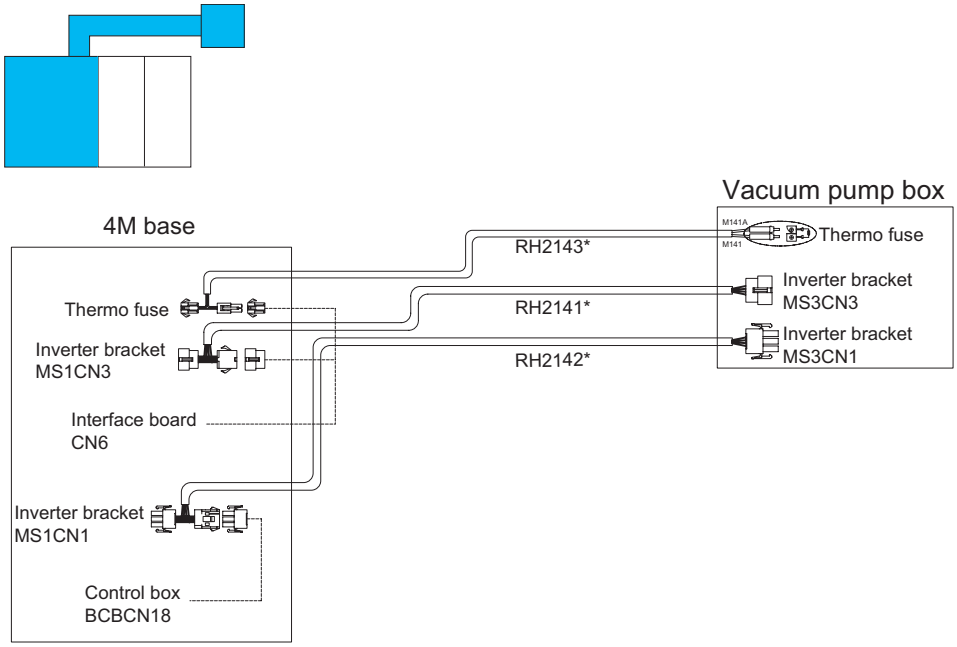

4M Base - 2M Base - 2M Base Harness Connection Diagram (2/4)

NXTSET202E

Do not pass the harness (RH2141*, RH2142*, RH2143*) between the 4M base and the vacuum pump box through the interior of the base. The harness should be installed along the outside of the base.

Pneumatic Connections

<For the Independent 4M Base (serial No. up to 294)>

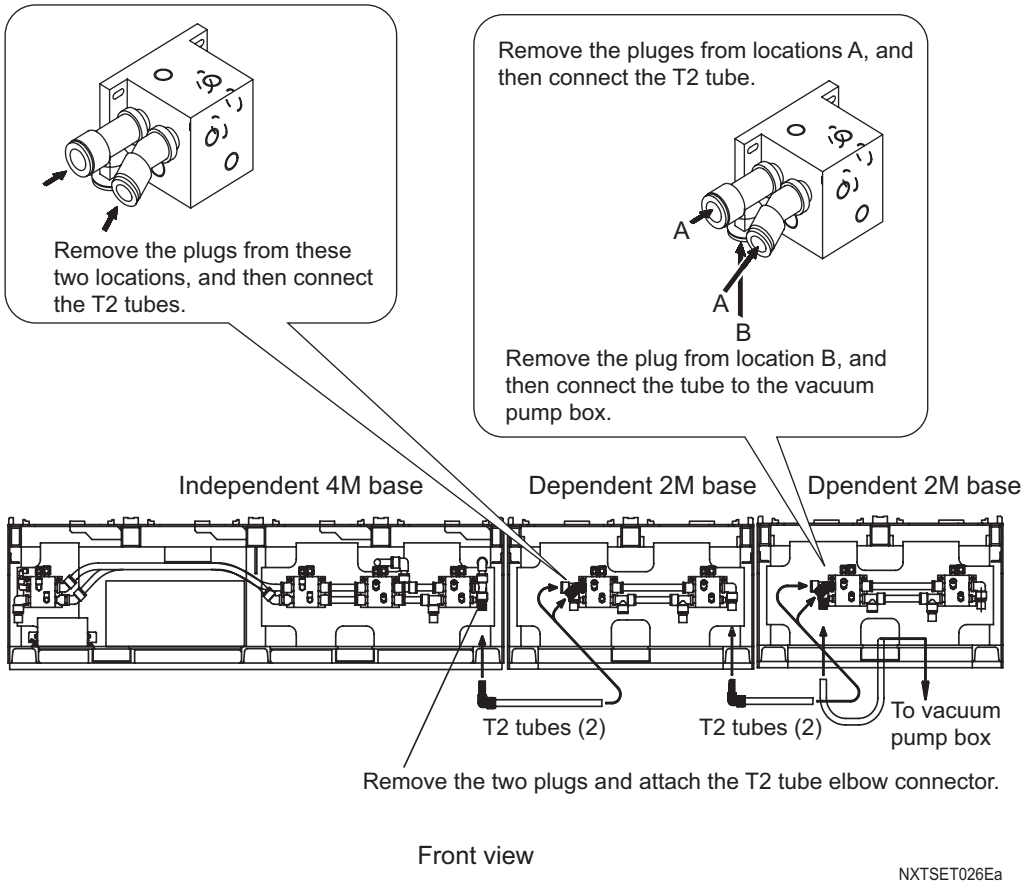

<For the Independent 4M Base (serial No. 295 and later)>

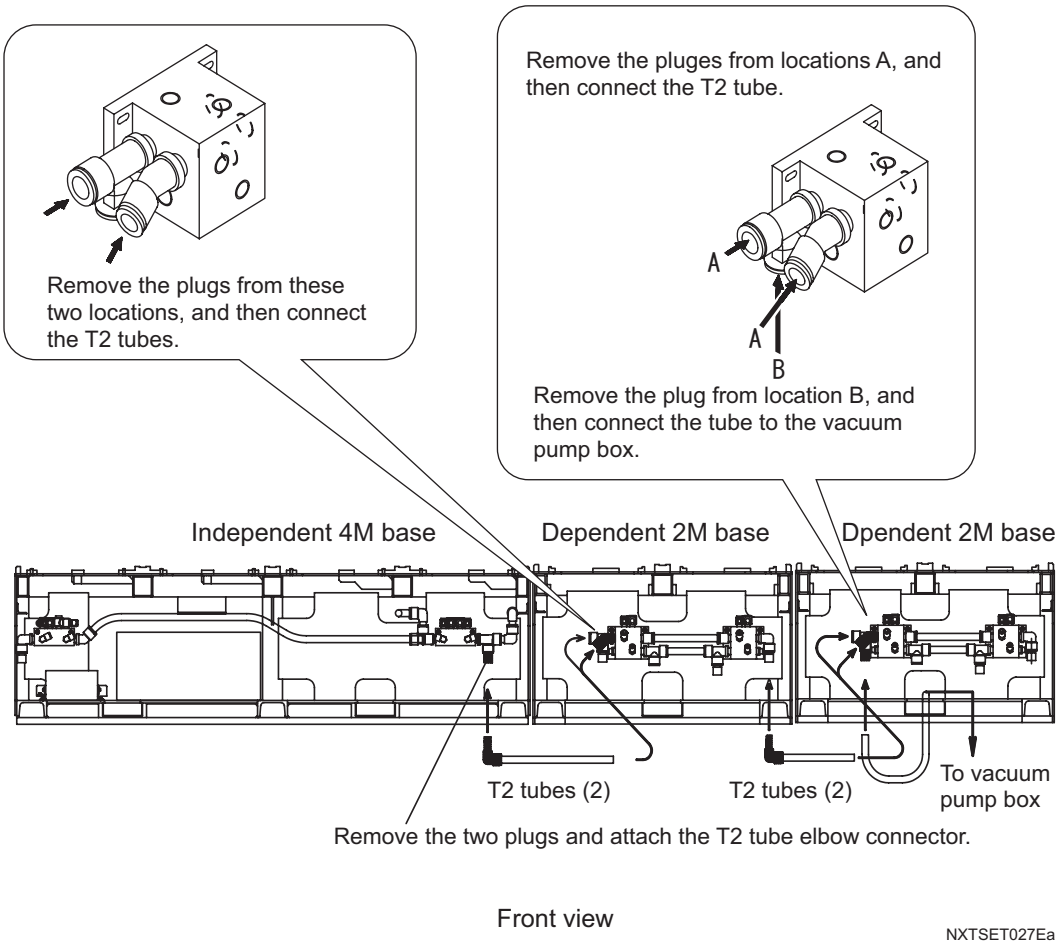

Connecting the Bases

After attaching the signal cables and pneumatic connections, fasten neighboring bases using the special bracket. Refer to section 3.8.13 "Fastening Extensions" for details.

3.8.9 Using One 2M Base and an Independent 4M Base (2)

Setting the Jumper and DIP Switches

Set the jumper switches and the DIP switches on the interface board and the remote I/O board in the base as shown in the diagram below. Refer to the "NXT Mechanical Reference" for details of the location of each board.

⚠CAUTION

Ensure the power to the machine is off before carrying out this procedure.

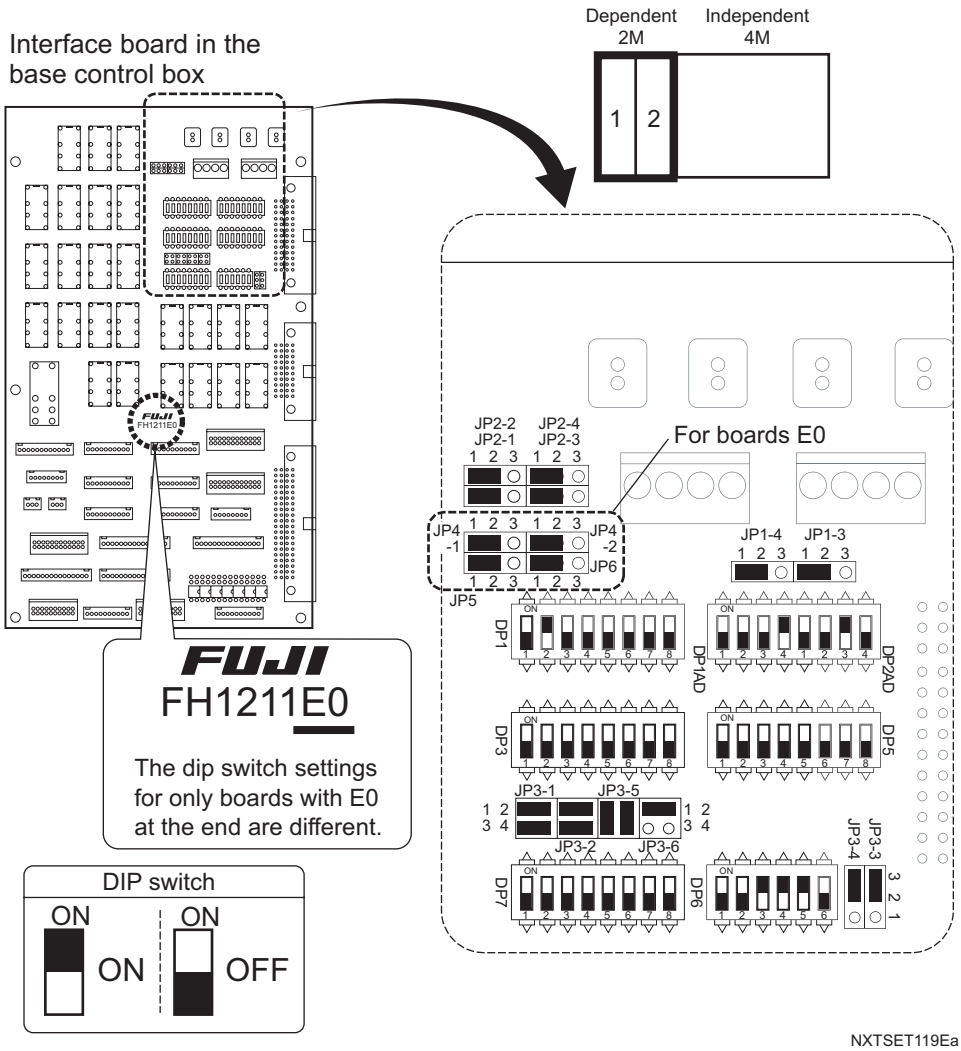

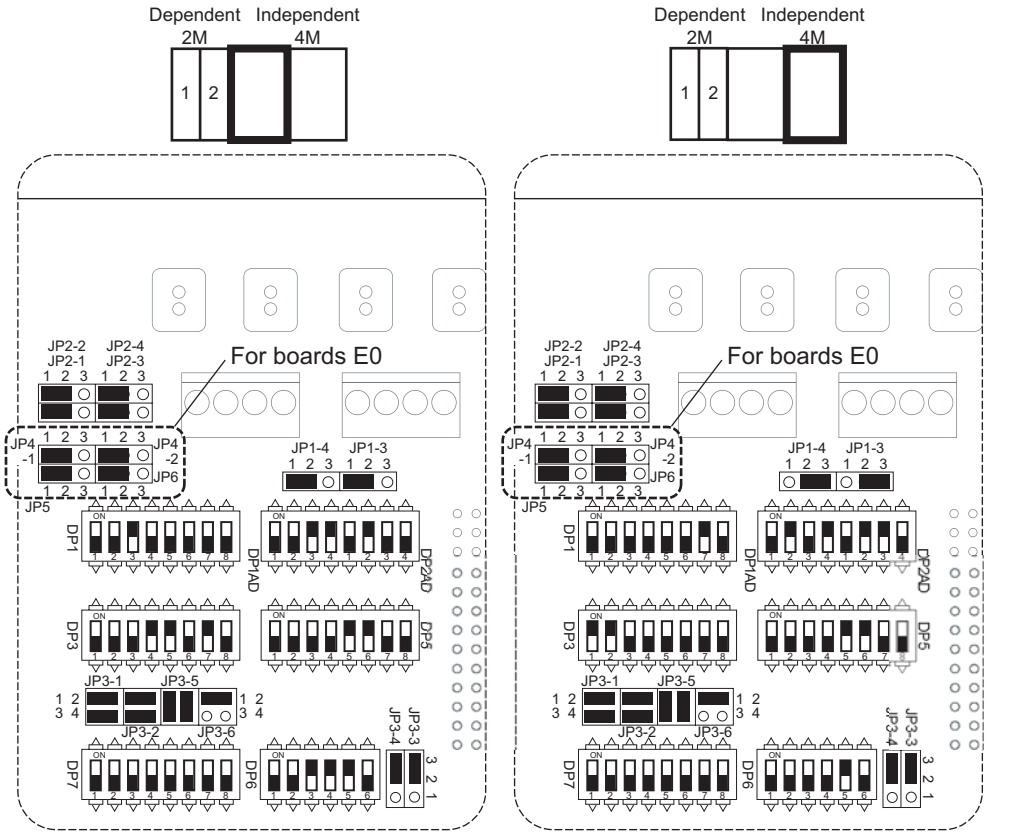
Dependent Independent
2M 4M
1 2
For boards E0
JP2-2 JP2-4
JP2-1 JP2-3
JP4 -1
JP4 -2
JP6
JP5
JP1-4 JP1-3
DP1
DP1AD
DP2AD
DP3
DP5
JP3-1 JP3-5
JP3-2 JP3-6
JP3-4 JP3-3
DP7
DP6
NXTSET120E

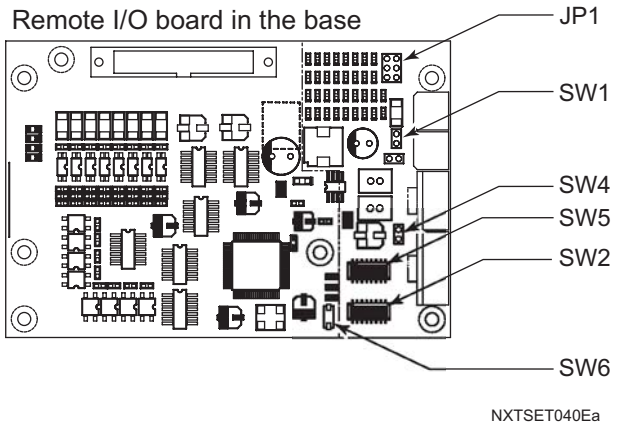
Remote I/O board in the base
JP1
SW1
SW4
SW5
SW2
SW6
NXTSET040Ea

Base	JP1	SW1	SW2	SW4	SW5	SW6
Dependent 2M Independent 4M 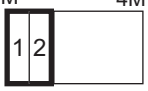	Open	Short		Short		
Dependent 2M Independent 4M 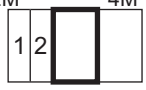	Open	Open	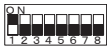	Short		
Dependent 2M Independent 4M 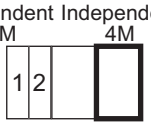	Open	Open		Short		

Signal Cable Connection Diagram (2M Base - Independent 4M Base)

Connect each signal cable as shown in the following diagram.

*Note: Base connection harness AJ517** are shown in bold.*

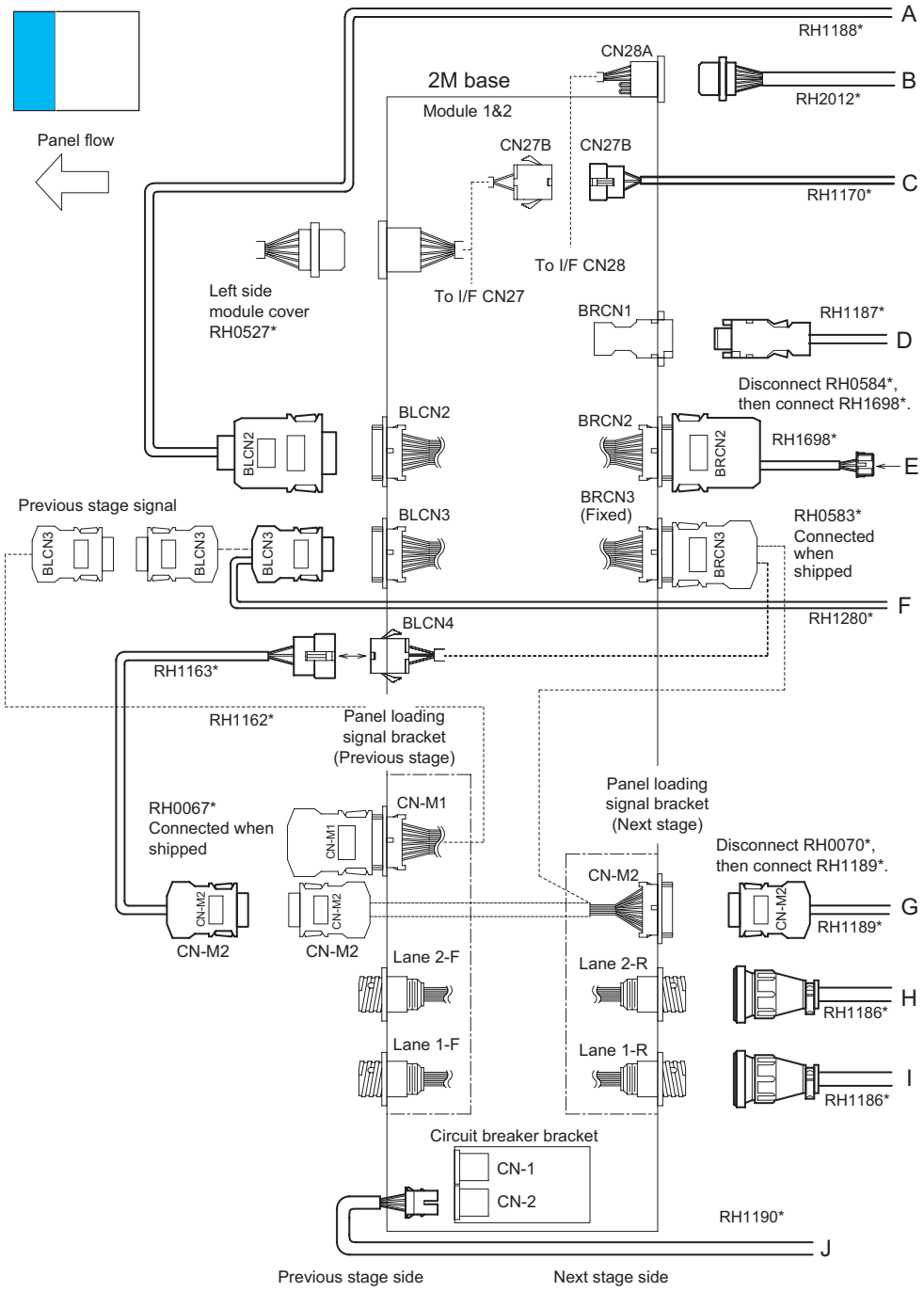

2M Base - 4M Base Harness Connection Diagram (1/2)

NXTSET203Ea

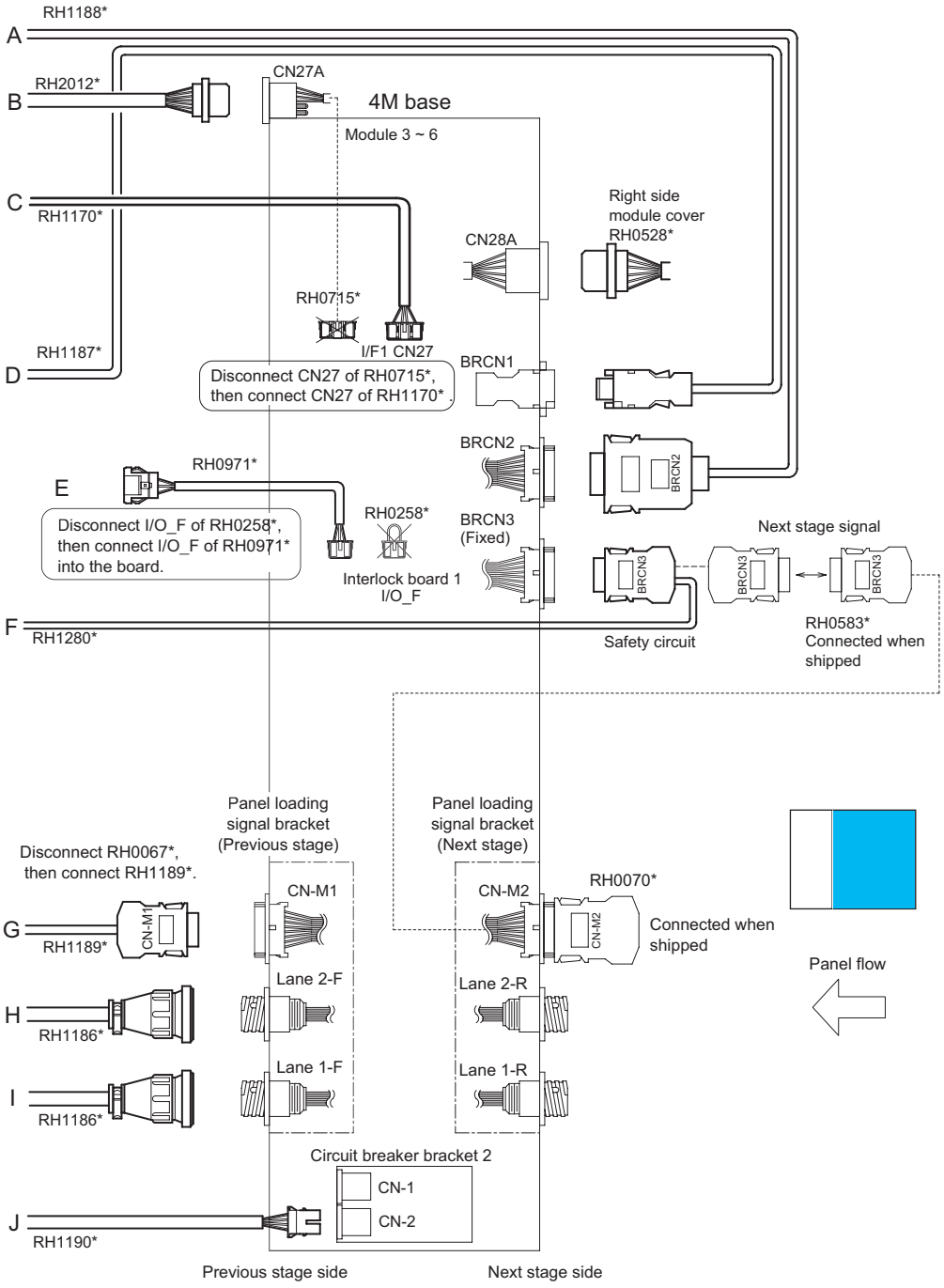

2M Base - 4M Base Harness Connection Diagram (2/2)

NXTSET204Ea

Pneumatic Connections

<For the Independent 4M Base (serial No. up to 294)>

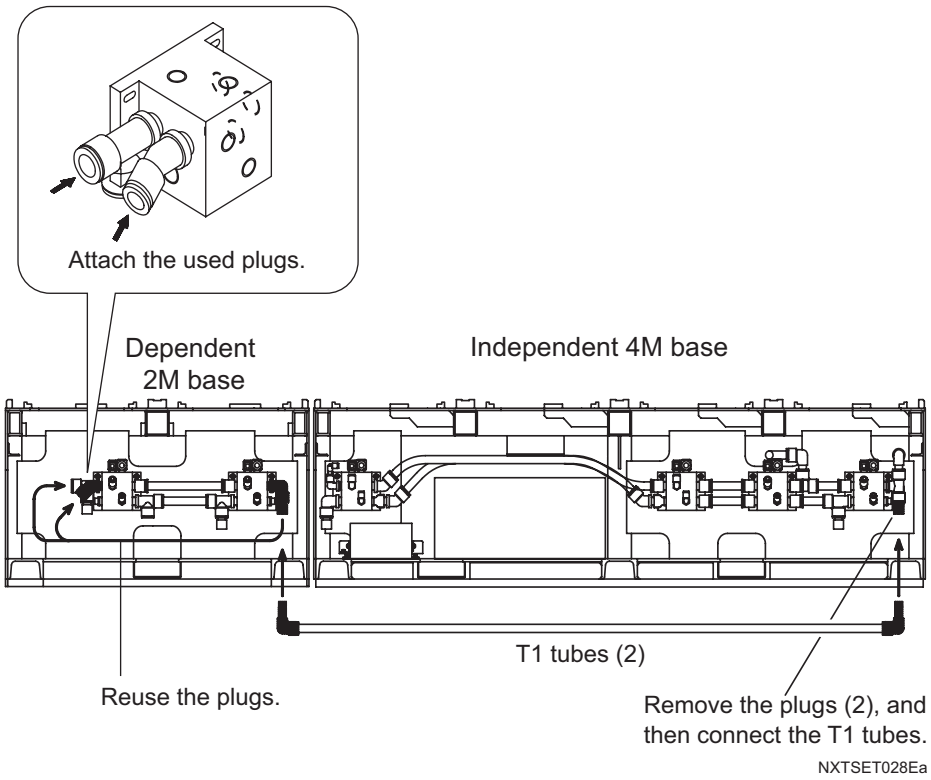

<For the Independent 4M Base (serial No. 295 and later)>

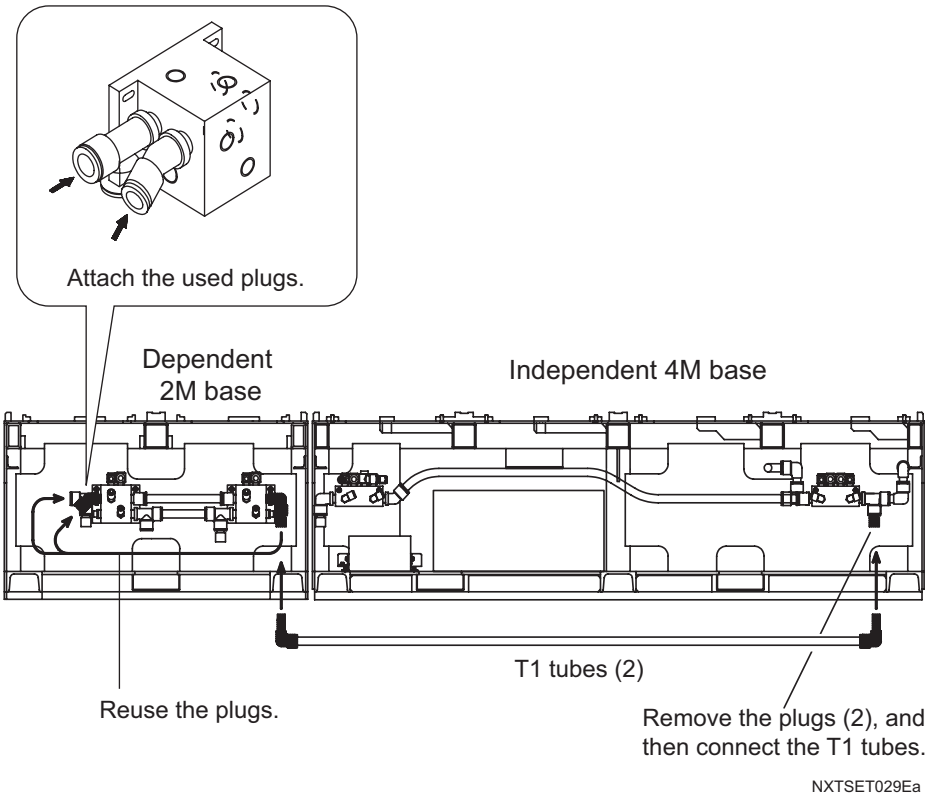

Connecting the Bases

After attaching the signal cables and pneumatic connections, fasten neighboring bases using the special bracket. Refer to section 3.8.13 "Fastening Extensions" for details.

3.8.10 Using Two 2M Bases and an Independent 4M Base (2)

Setting the Jumper and DIP Switches

Set the jumper switches and the DIP switches on the interface board and the remote I/O board in the base as shown in the diagram below. Refer to the "NXT Mechanical Reference" for details of the location of each board.

⚠CAUTION

Ensure the power to the machine is off before carrying out this procedure.

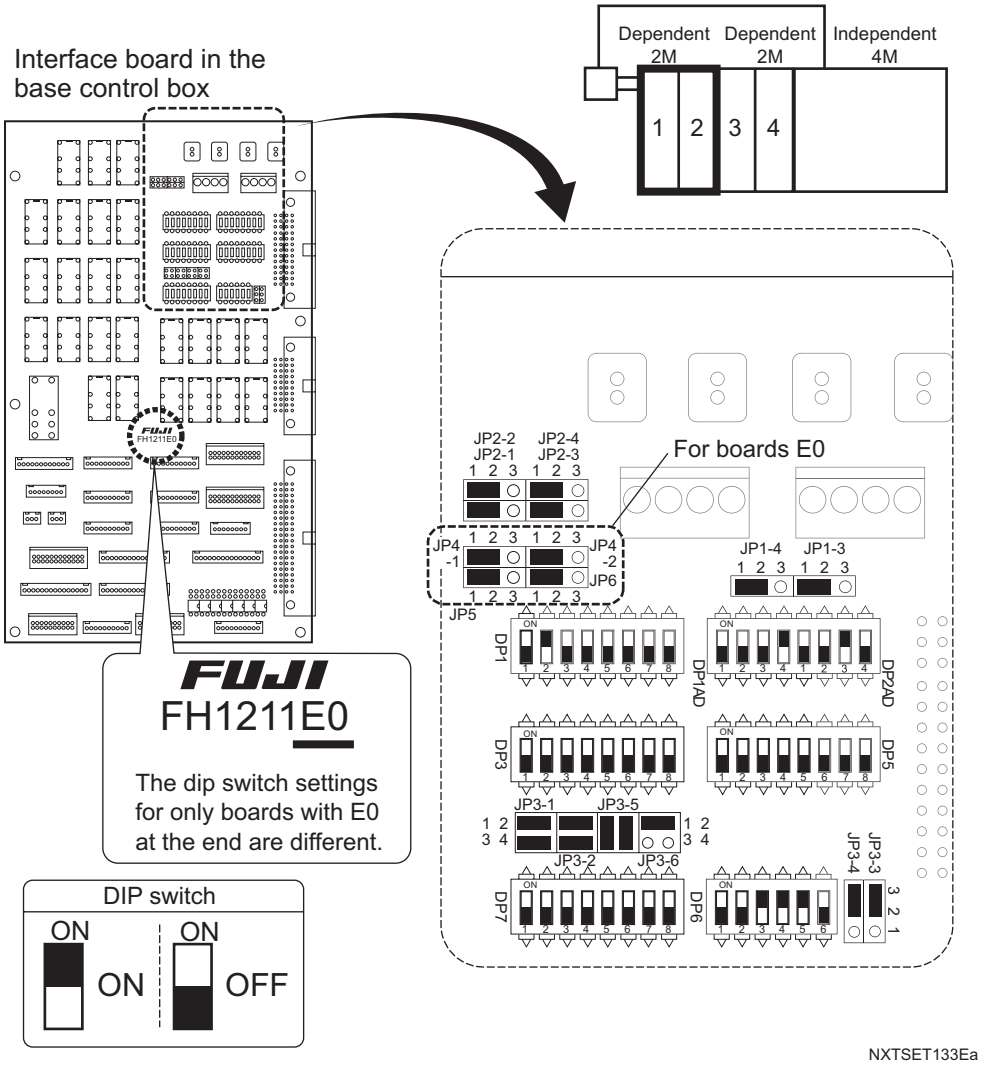

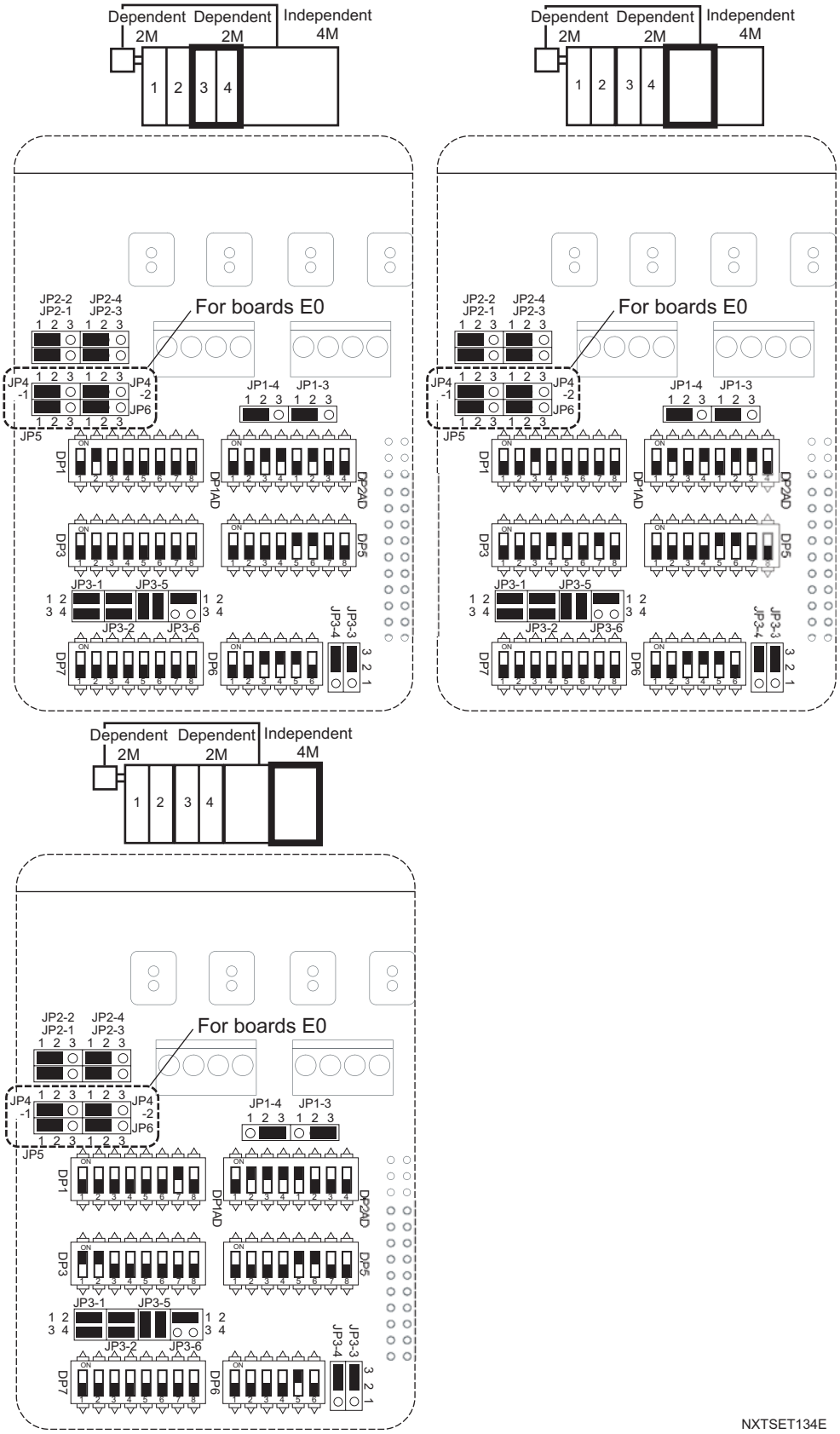
Dependent 2M
Dependent 2M
Independent 4M
1 2 3 4
For boards E0
JP2-2 JP2-1
JP2-4 JP2-3
JP4 -1
JP4 -2
JP6
JP5
JP1-4
JP1-3
DP1
DP1AD
DP2AD
DP3
DP5
JP3-1
JP3-5
JP3-2
JP3-6
JP3-4
JP3-3
DP7
DP6
NXTSET134E

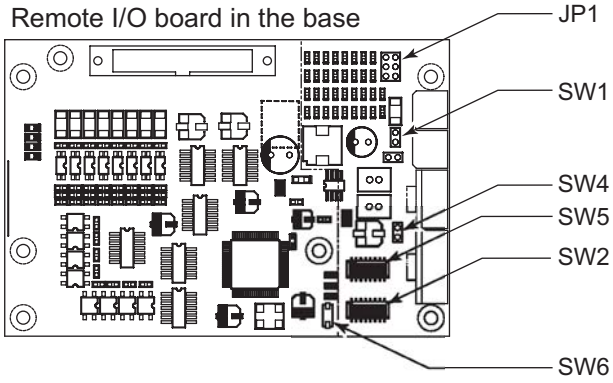

NXTSET040Ea

Base	JP1	SW1	SW2	SW4	SW5	SW6
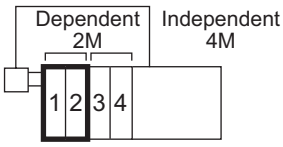	Open	Open		Short		
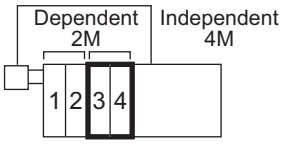	Open	Open		Short		
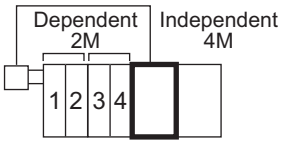	Open	Open		Short	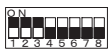	
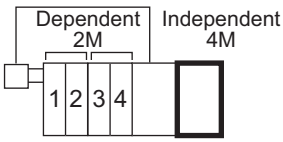	Open	Short		Short		

Signal Cable Connection Diagram (2M Base - 2M Base - Independent 4M Base)

Base connection harnesses AJ457** (2M - 2M) and AJ517** (4M - 2M) are shown in bold.

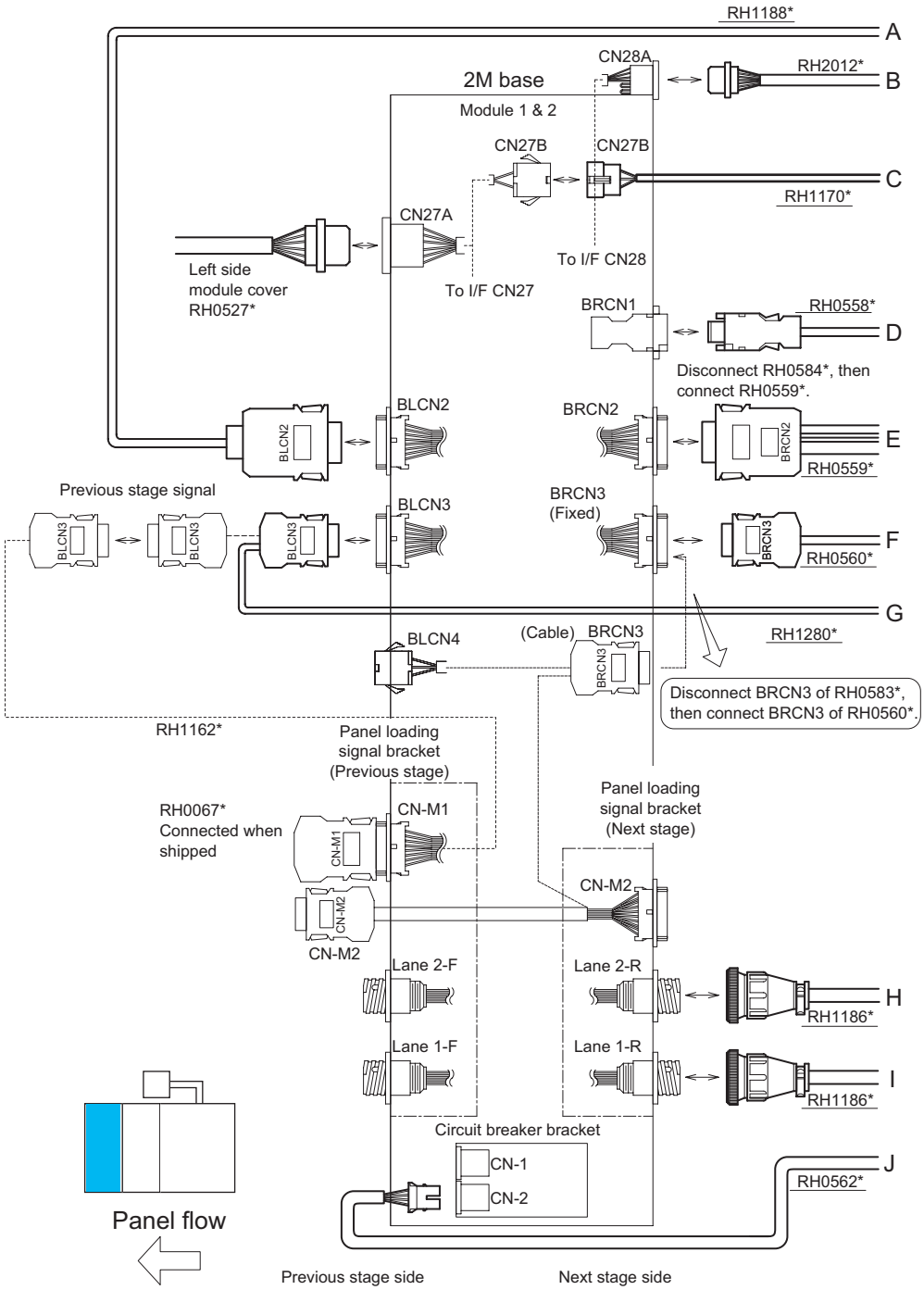

2M Base - 2M Base - 4M Base - Vacuum Pump Harness Connection Diagram (1/4)

NXTSET205Ea

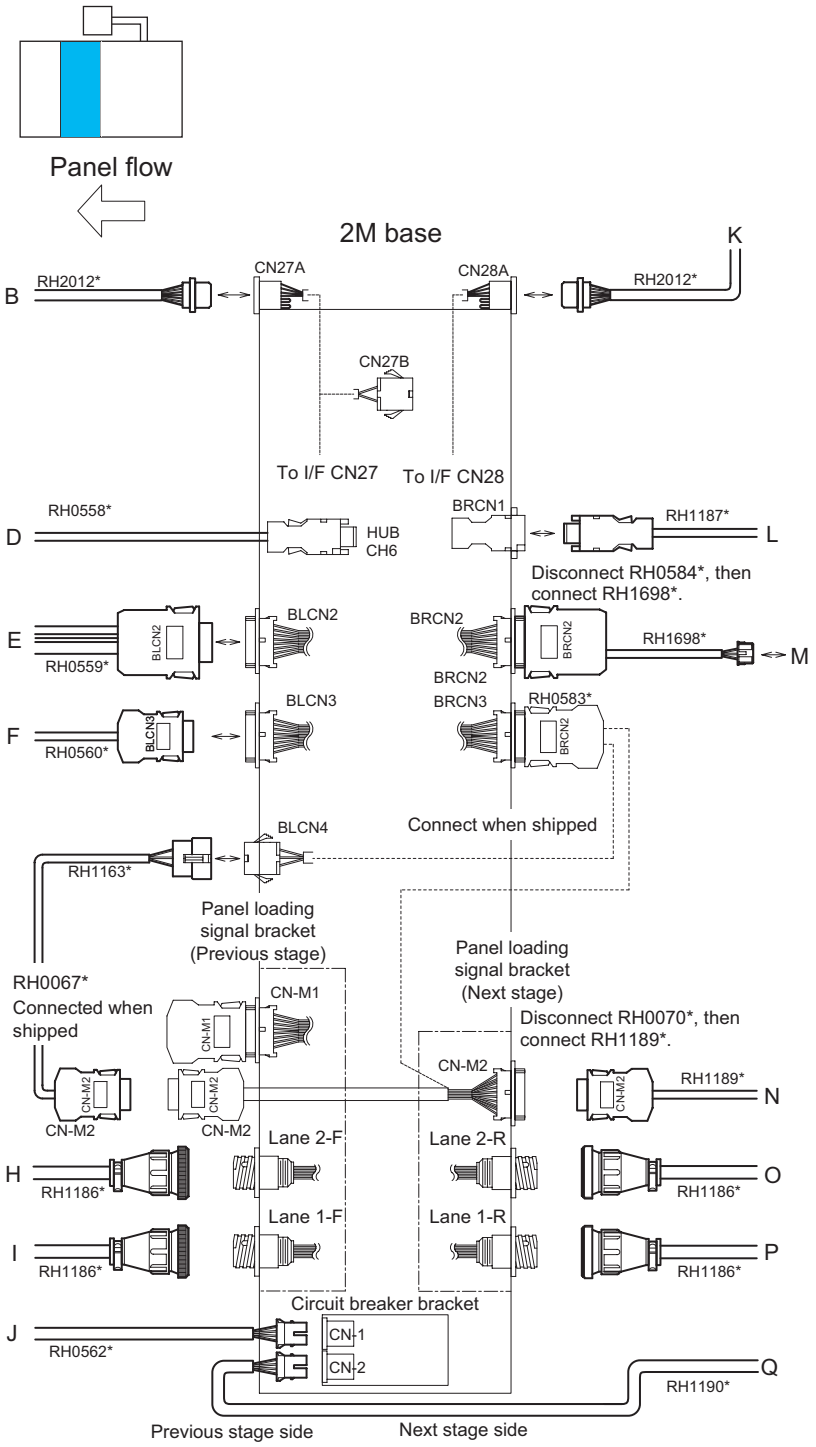

2M Base - 2M Base - 4M Base - Vacuum Pump
Harness Connection Diagram (2/4)

NXTSET206Ea

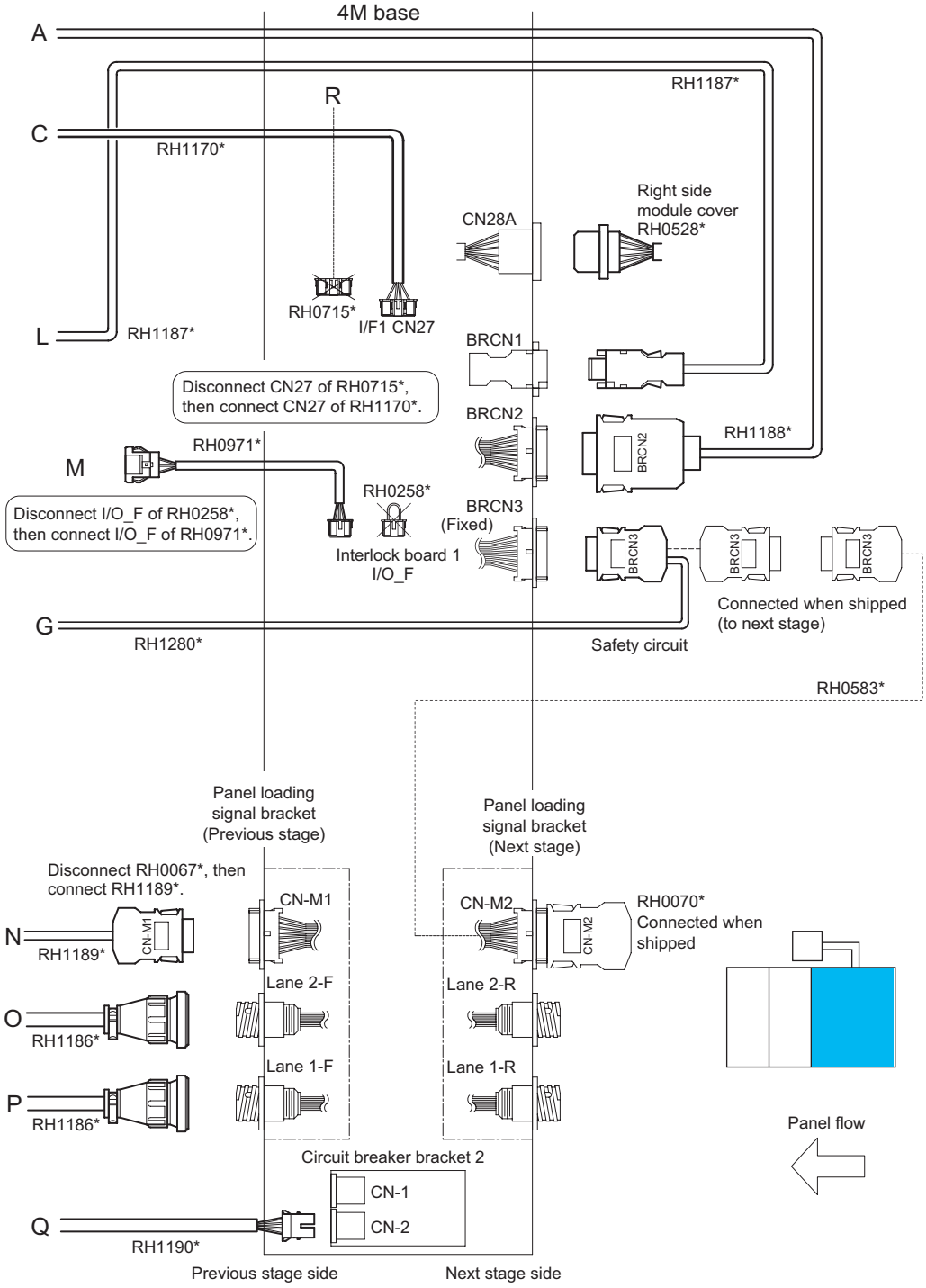

2M Base - 2M Base - 4M Base - Vacuum Pump Harness Connection Diagram (3/4)

NXTSET207Ea

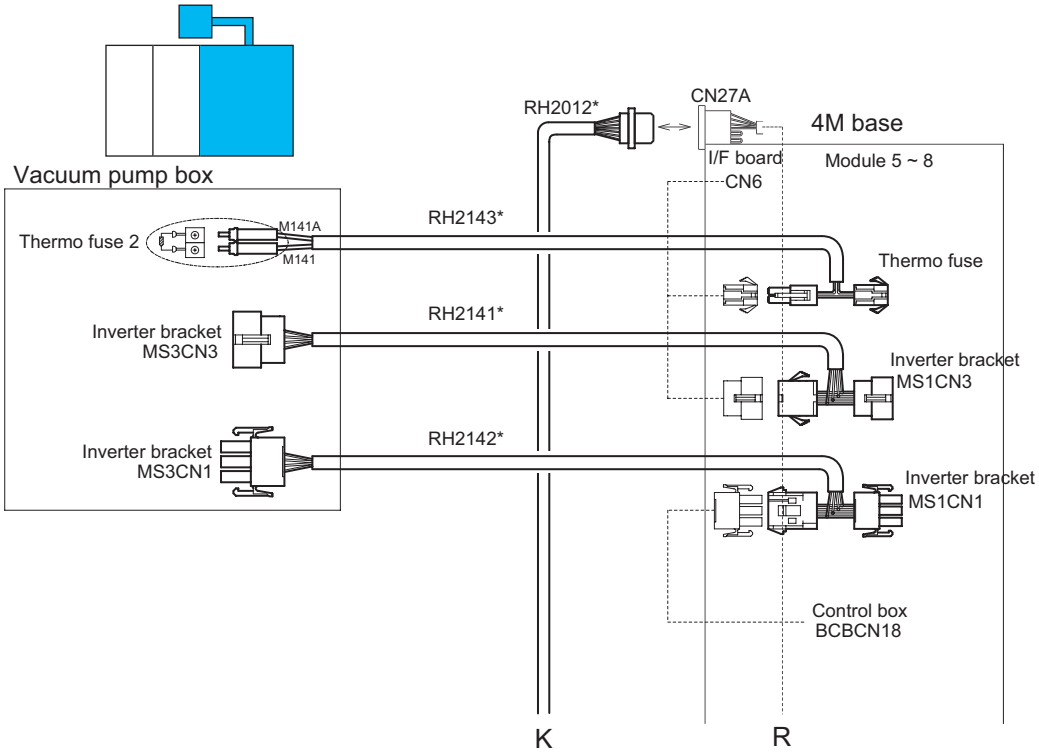

2M Base - 2M Base - 4M Base - Vacuum Pump Harness Connection Diagram (4/4)

NXTSET208Ea

Pneumatic Connections

<For the Independent 4M Base (serial No. up to 294)>

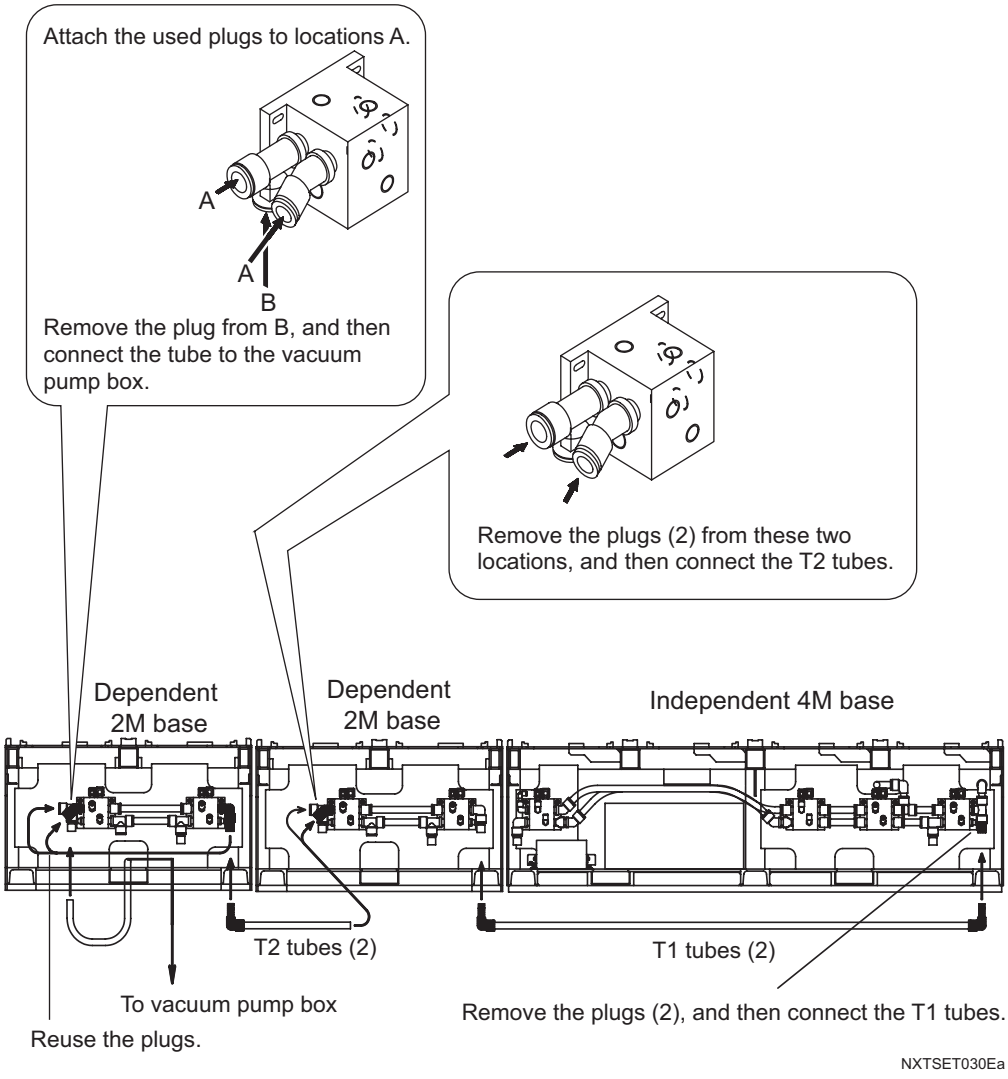

<For the Independent 4M Base (serial No. 295 and later)>

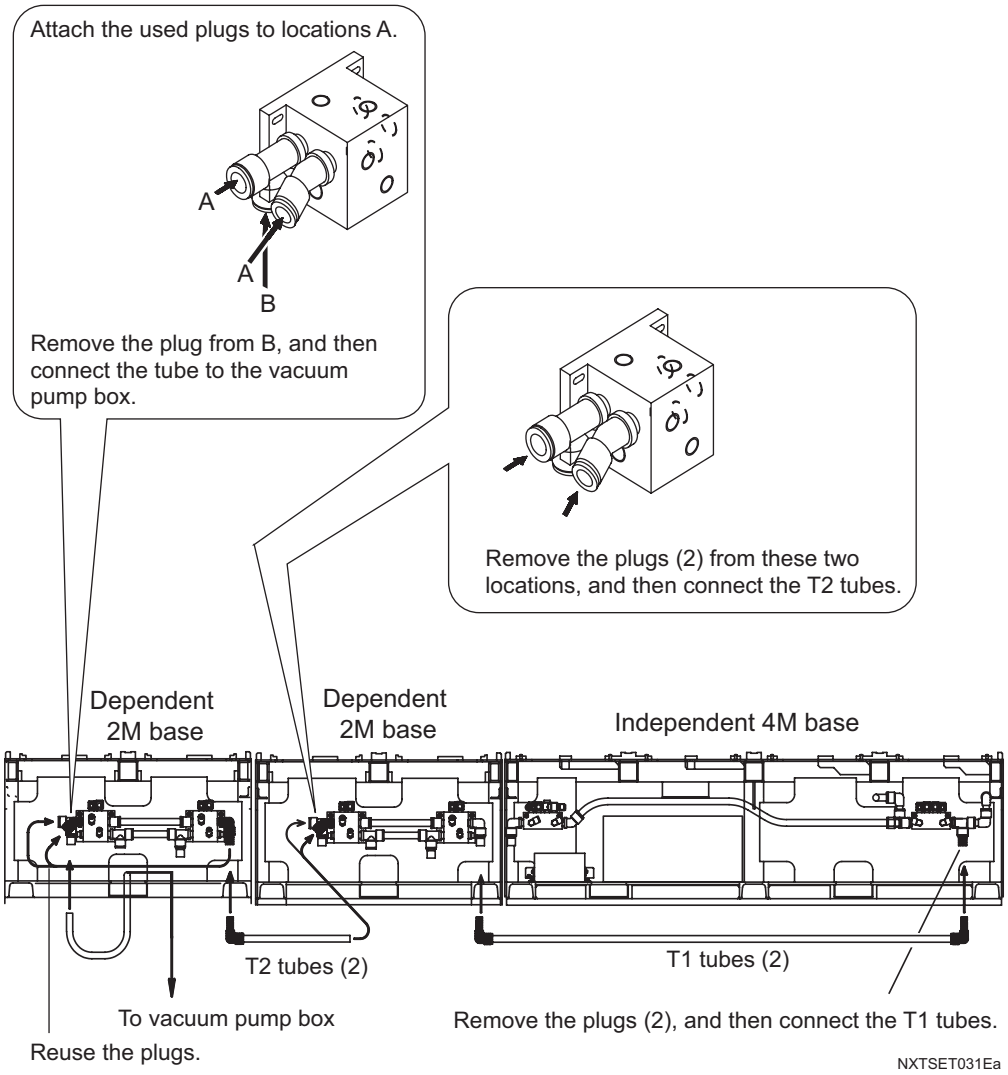

Connecting the Bases

After attaching the signal cables and pneumatic connections, fasten neighboring bases using the special bracket. Refer to section 3.8.13 "Fastening Extensions" for details.

3.8.11 Using One 4M Base and an Independent 4M Base (1)

Setting the Jumper and DIP Switches

Set the jumper switches and the DIP switches on the interface board and the remote I/O board in the base as shown in the diagram below. Refer to the "NXT Mechanical Reference" for details of the location of each board.

⚠CAUTION

Ensure the power to the machine is off before carrying out this procedure.

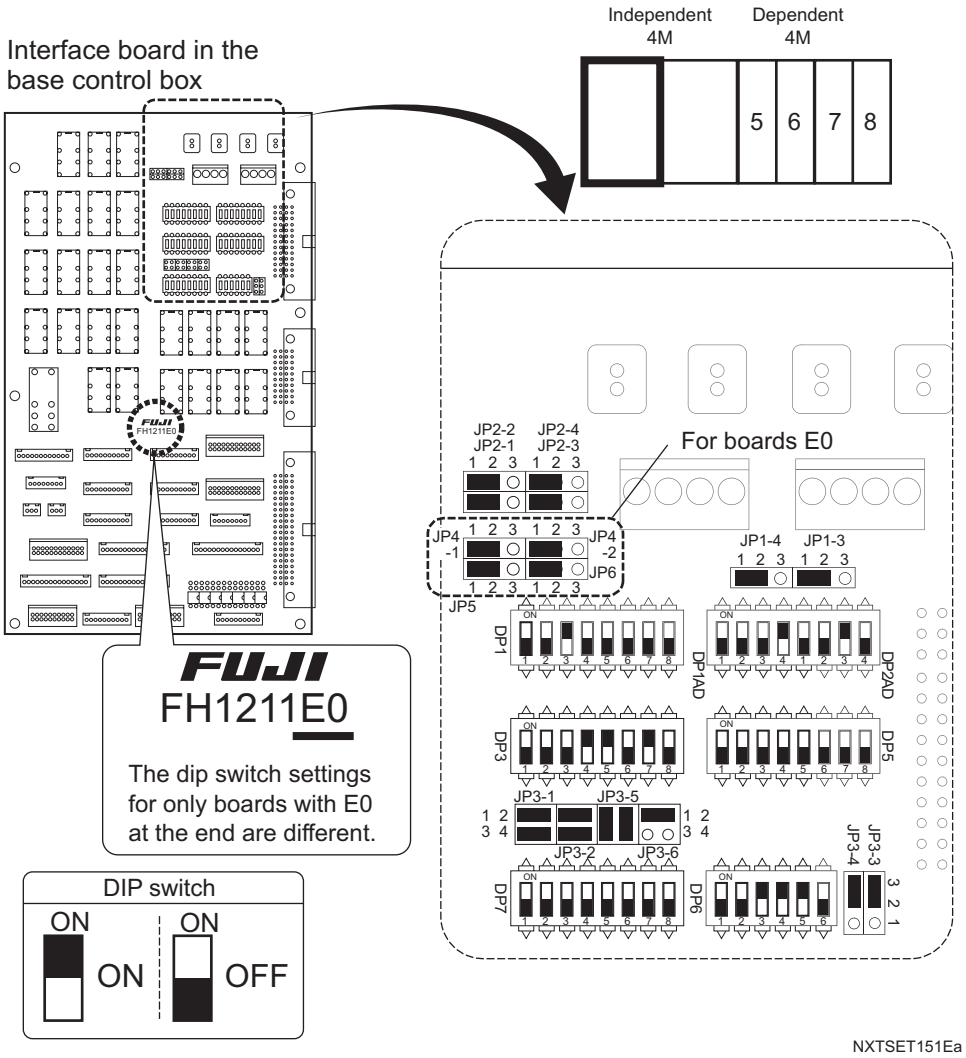

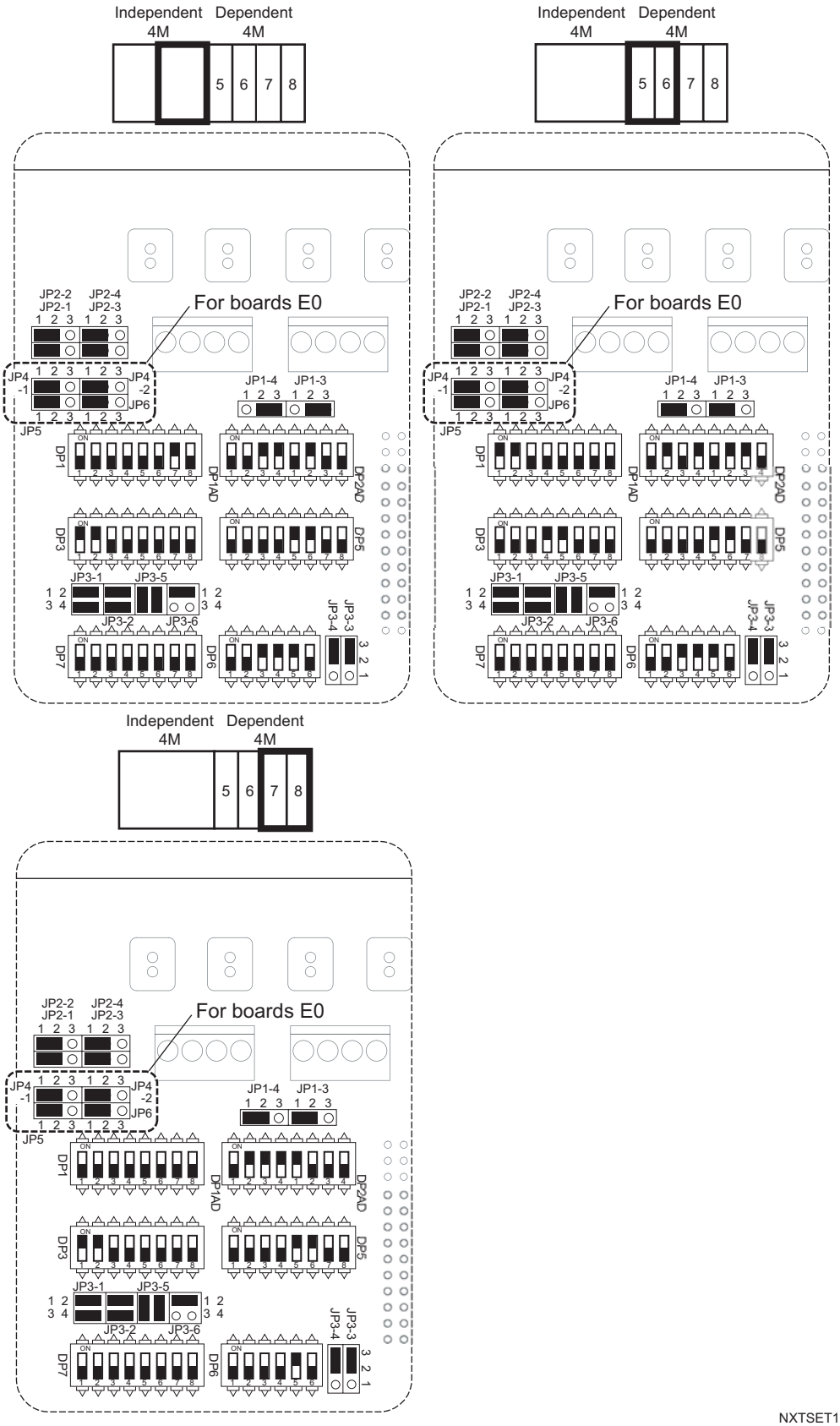
Independent 4M
Dependent 4M
5 6 7 8
For boards E0
JP2-2 JP2-1
JP2-4 JP2-3
JP4 -1
JP4 -2
JP6
JP5
JP1-4 JP1-3
DP1
DP1AD
DP2AD
DP3
DP5
JP3-1 JP3-5
JP3-2 JP3-6
DP7
DP6
JP3-4 JP3-3
NXTSET152E

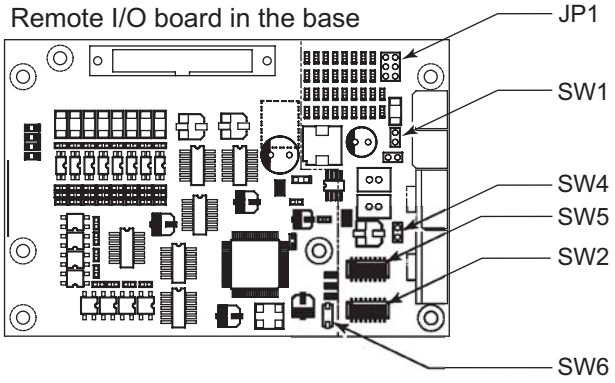

NXTSET040Ea

Base	JP1	SW1	SW2	SW4	SW5	SW6
Independent 4M / Dependent 4M: 5 6 7 8	Open	Open		Short		
Independent 4M / Dependent 4M: 5 6 7 8	Open	Short		Short		
Independent 4M / Dependent 4M: 5 6 7 8	Open	Open		Short		
Independent 4M / Dependent 4M: 5 6 7 8	Open	Open		Short		

Signal Cable Connection Diagram (Independent 4M Base - 4M Base)

Connect each signal cable as shown in the following diagram.

Do not pass the harness for the vacuum pump box (RH2130*, RH2131*, RH2133*) through the interior of the base. The harness should be installed along the outside of the base.

*Note: Base connection harness AJ110** are shown in bold.*

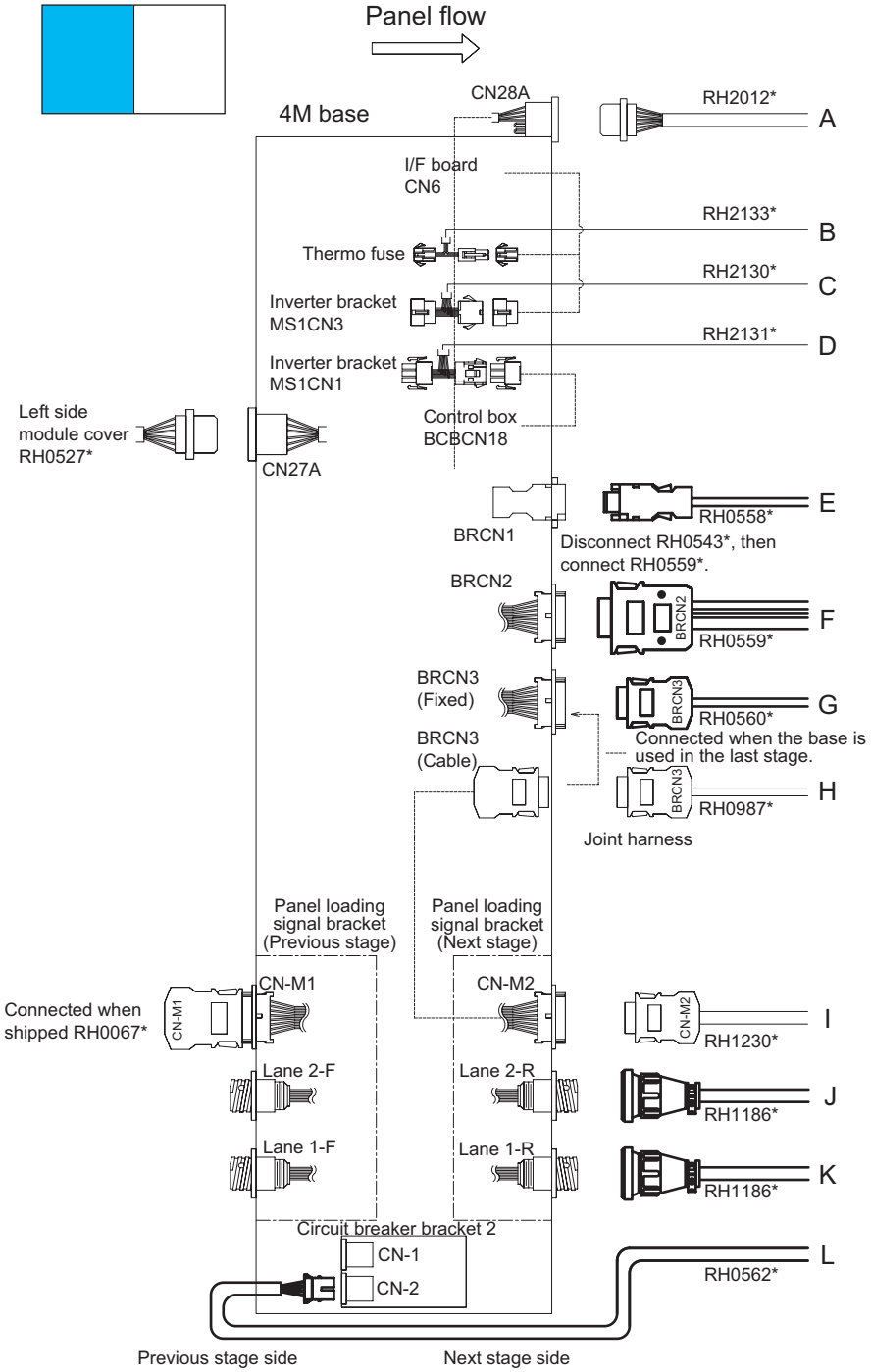

4M Base - 4M Base Harness Connection Diagram (1/2)

NXTSET209Ea

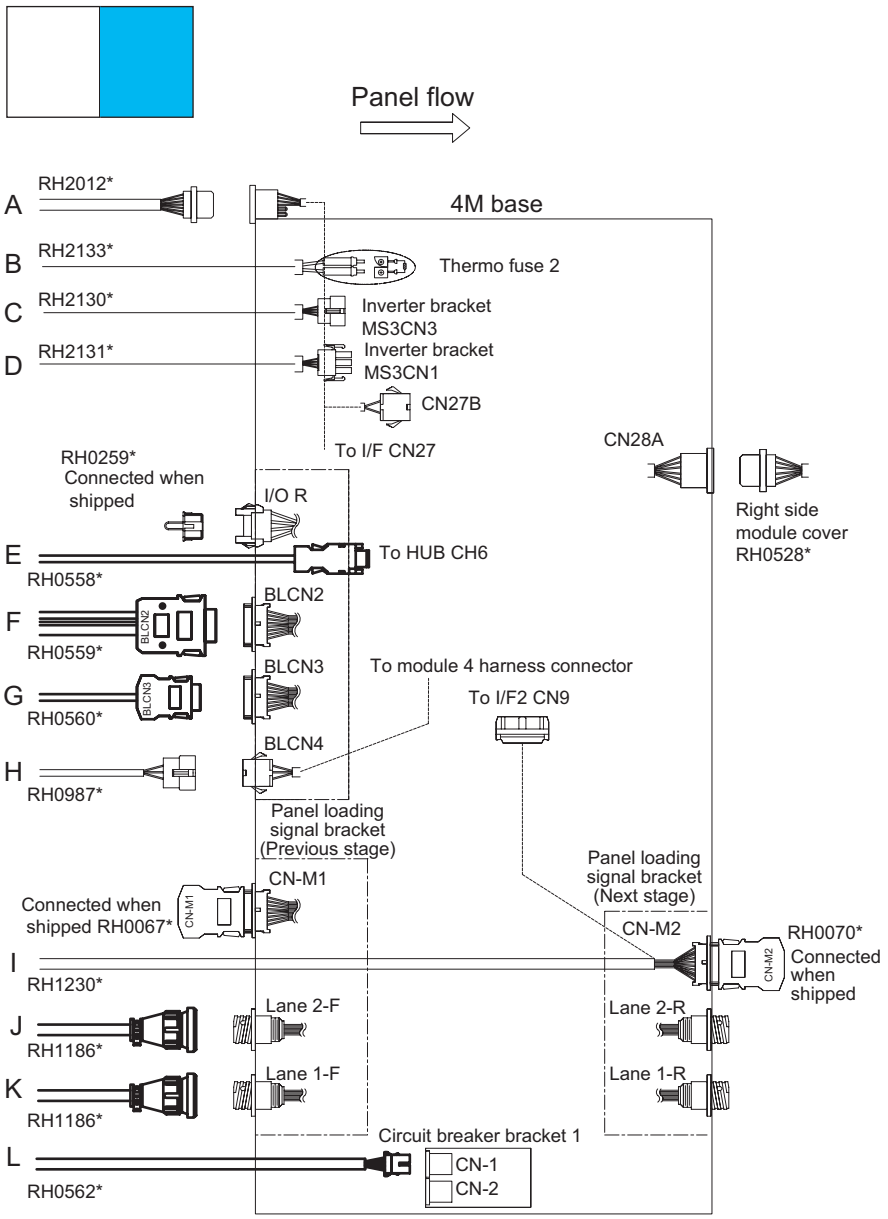

4M Base - 4M Base Harness Connection Diagram (2/2)

NXTSET210Ea

Pneumatic Connections

<For the Independent 4M Base (serial No. up to 294)>

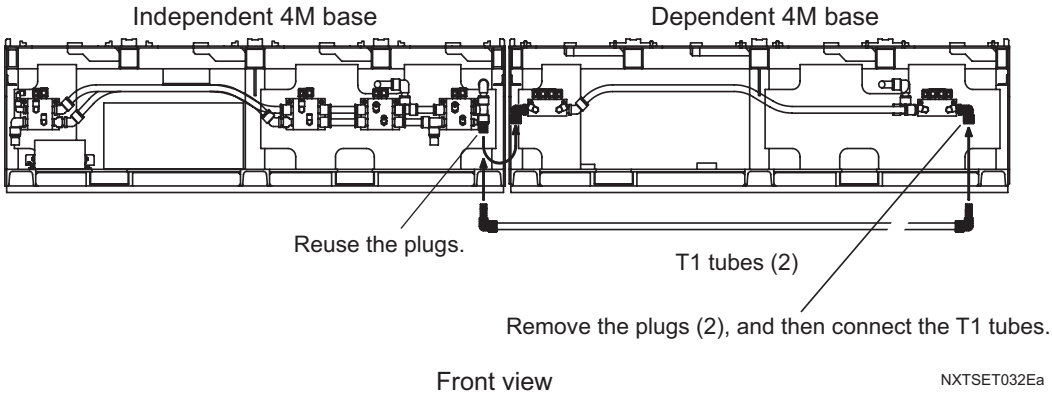

<For the Independent 4M Base (serial No. 295 and later)>

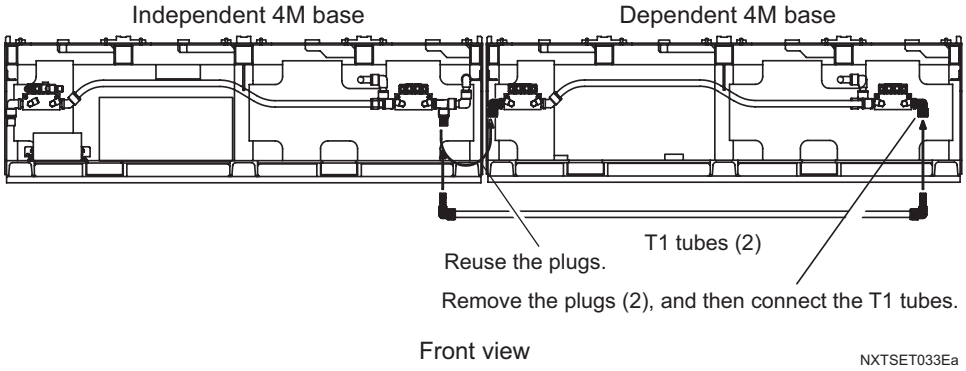

Connecting the Bases

After attaching the signal cables and pneumatic connections, fasten neighboring bases using the special bracket. Refer to section 3.8.13 "Fastening Extensions" for details.

3.8.12 Using One 4M Base and an Independent 4M Base (2)

Setting the Jumper and DIP Switches

Set the jumper switches and the DIP switches on the interface board and the remote I/O board in the base as shown in the diagram below. Refer to the "NXT Mechanical Reference" for details of the location of each board.

⚠CAUTION

Ensure the power to the machine is off before carrying out this procedure.

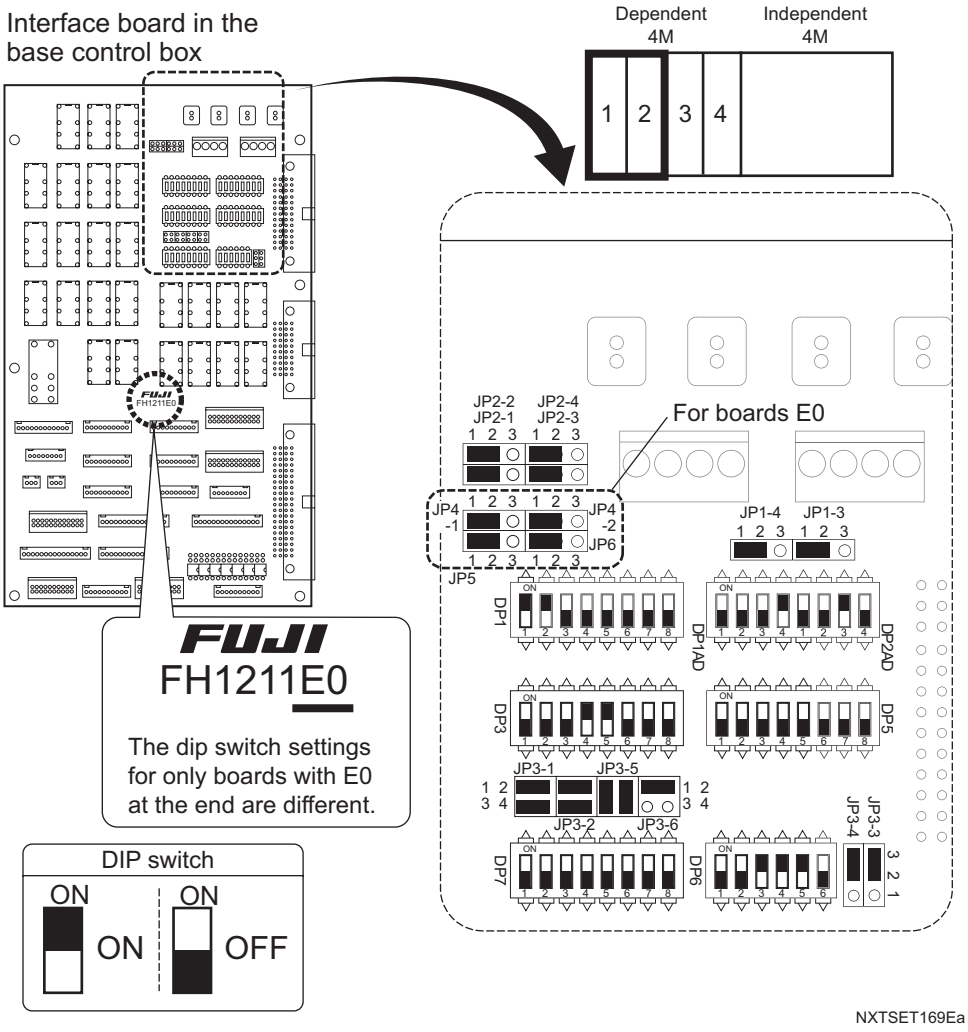

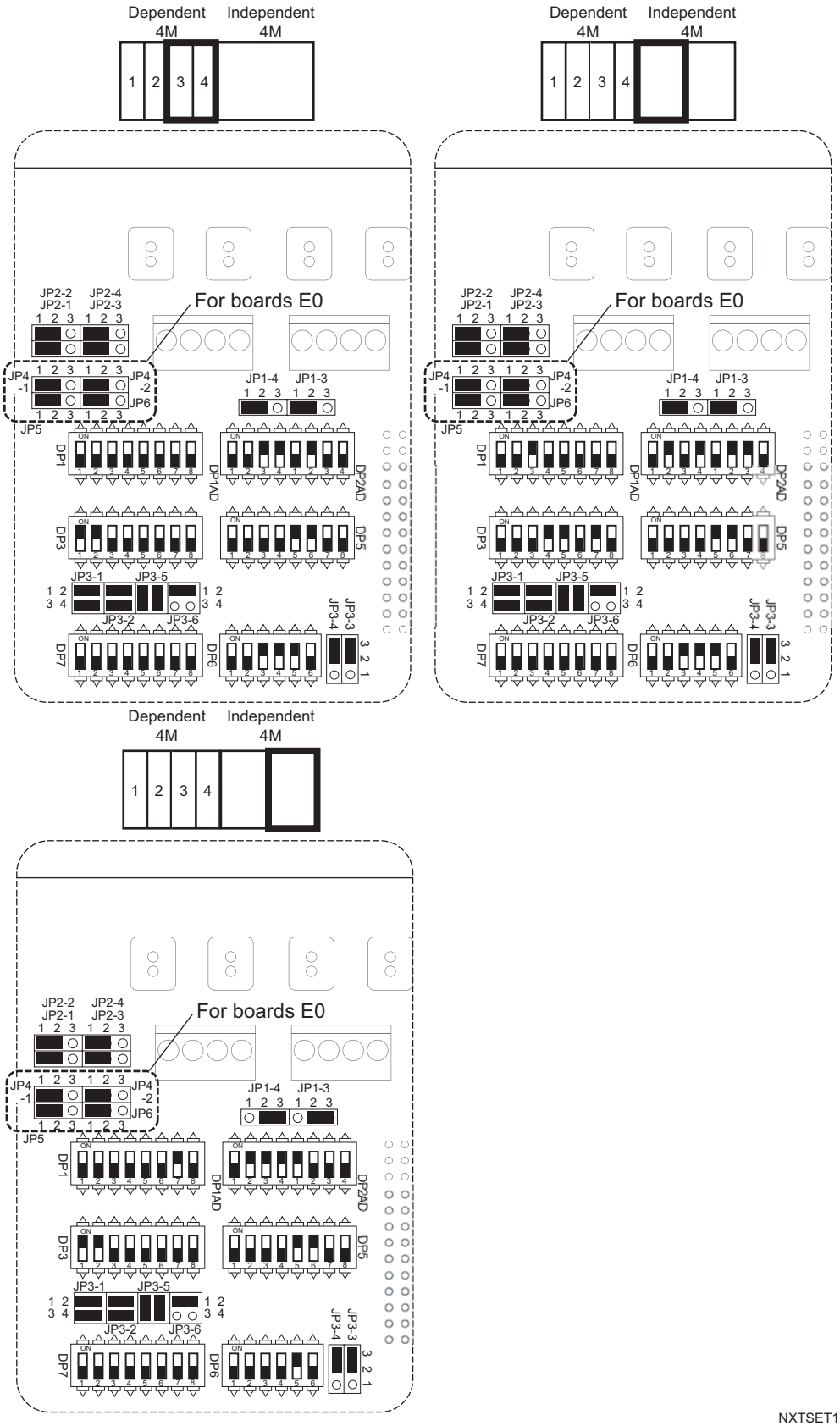
Dependent 4M
Independent 4M
1 2 3 4
For boards E0
JP2-2 JP2-1
JP2-4 JP2-3
JP4 -1
JP4 -2
JP6
JP5
JP1-4
JP1-3
DP1
DP1AD
DP2AD
DP3
DP5
JP3-1
JP3-5
JP3-2
JP3-6
JP3-4
JP3-3
DP7
DP6
NXTSET170E

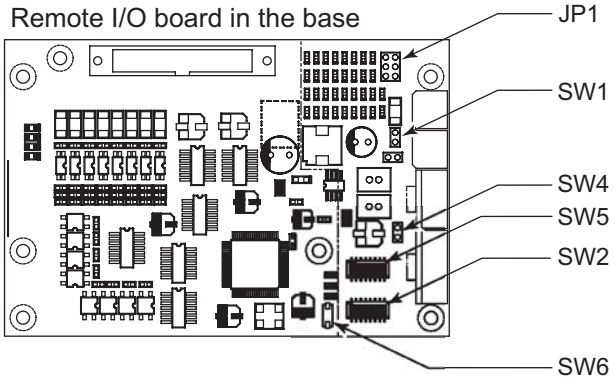

NXTSET040Ea

Base	JP1	SW1	SW2	SW4	SW5	SW6
Dependent Independent 4M 4M 1 2 3 4	Open	Open		Short		
Dependent Independent 4M 4M 1 2 3 4	Open	Short		Short		
Dependent Independent 4M 4M 1 2 3 4	Open	Open		Short		
Dependent Independent 4M 4M 1 2 3 4	Open	Open		Short		

Signal Cable Connection Diagram (4M Base - Independent 4M Base)

Connect each signal cable as shown in the following diagram.

Do not pass the harness for the vacuum pump box (RH2130*, RH2131*, RH2133*) through the interior of the base. The harness should be installed along the outside of the base.

*Note: Base connection harness AJ456** are shown in bold.*

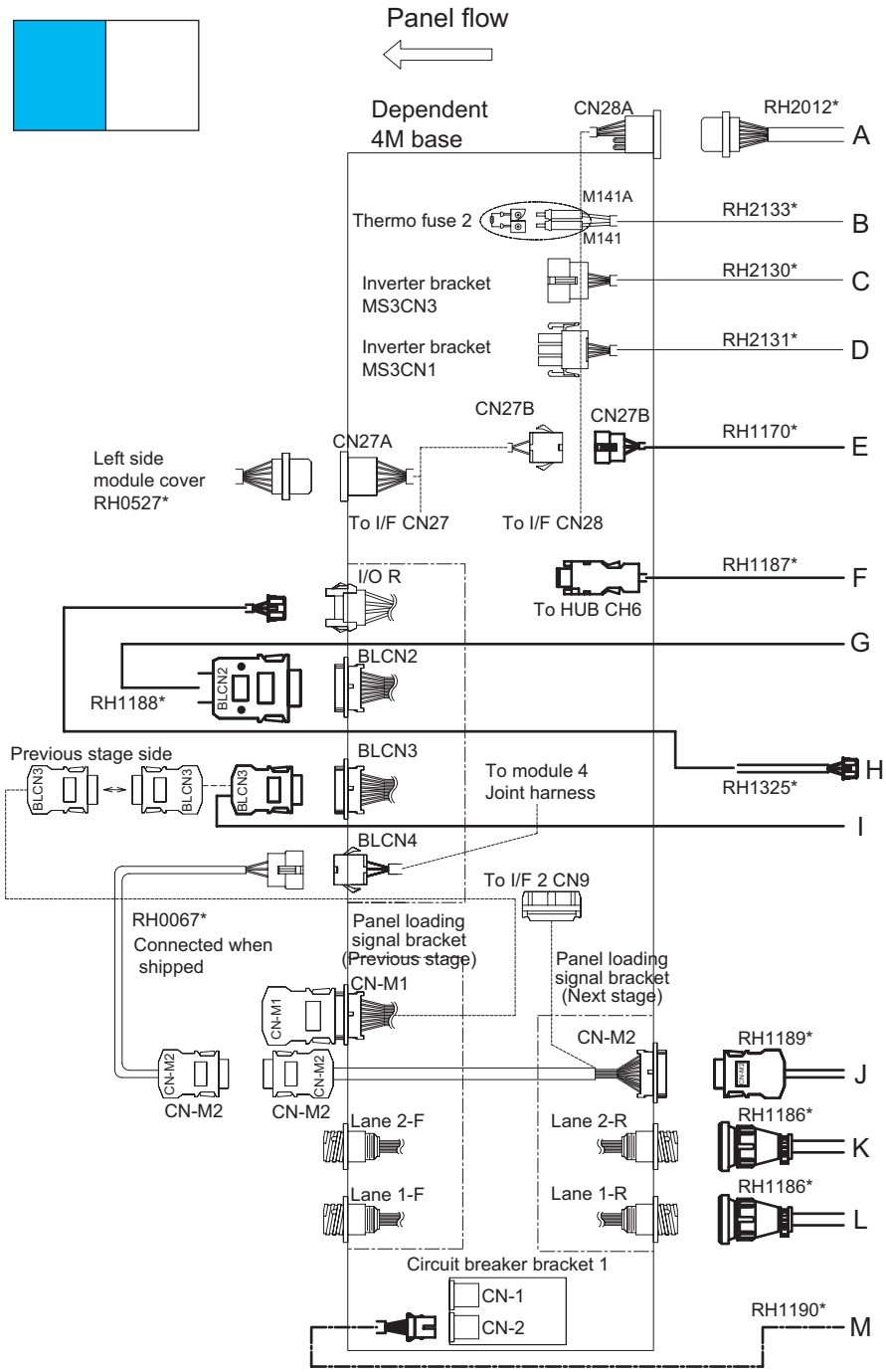

4M Base - 4M Base Harness Connection Diagram (1/2)

NXTSET211Ea

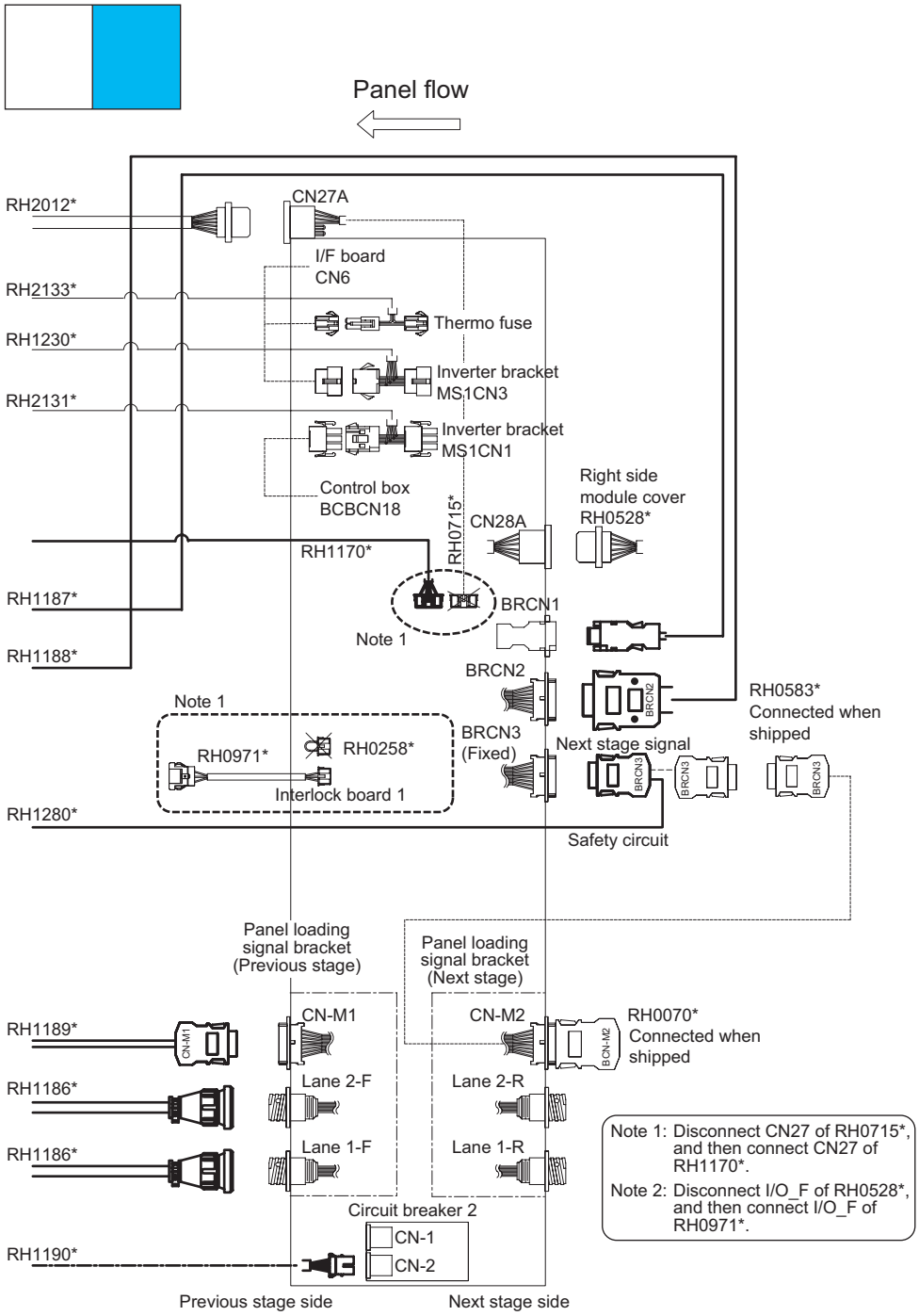

4M Base - 4M Base Harness Connection Diagram (2/2)

NXTSET212Ea

Pneumatic Connections

<For the Independent 4M Base (serial No. up to 294)>

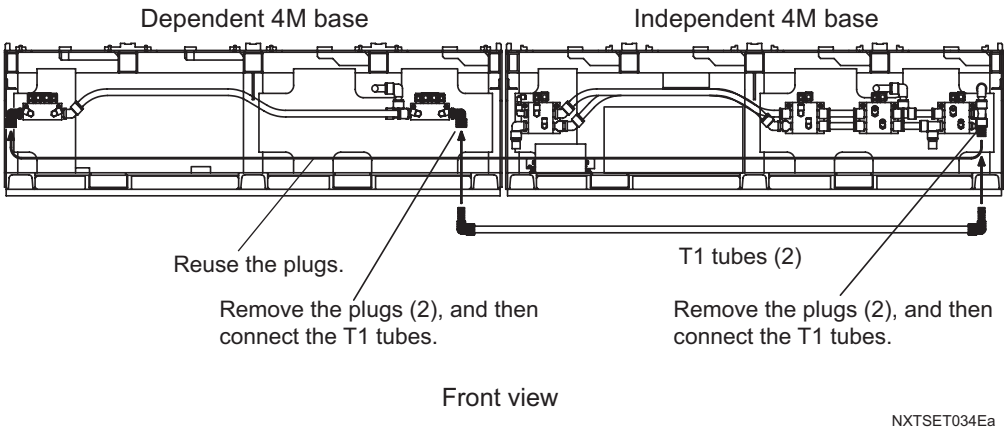

<For the Independent 4M Base (serial No. 295 and later)>

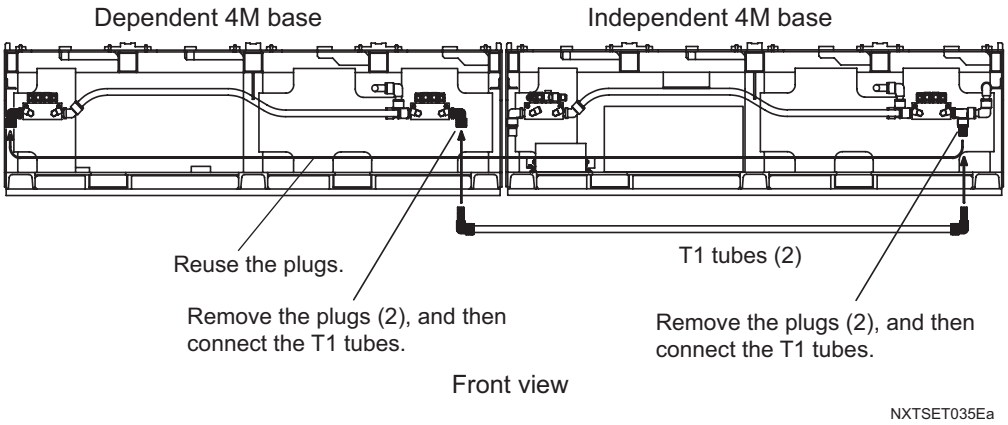

Connecting the Bases

After attaching the signal cables and pneumatic connections, fasten neighboring bases using the special bracket. Refer to section 3.8.13 "Fastening Extensions" for details.

3.8.13 Fastening Extensions

All individual bases are connected together for base extensions.

Connection of Bases at the Front

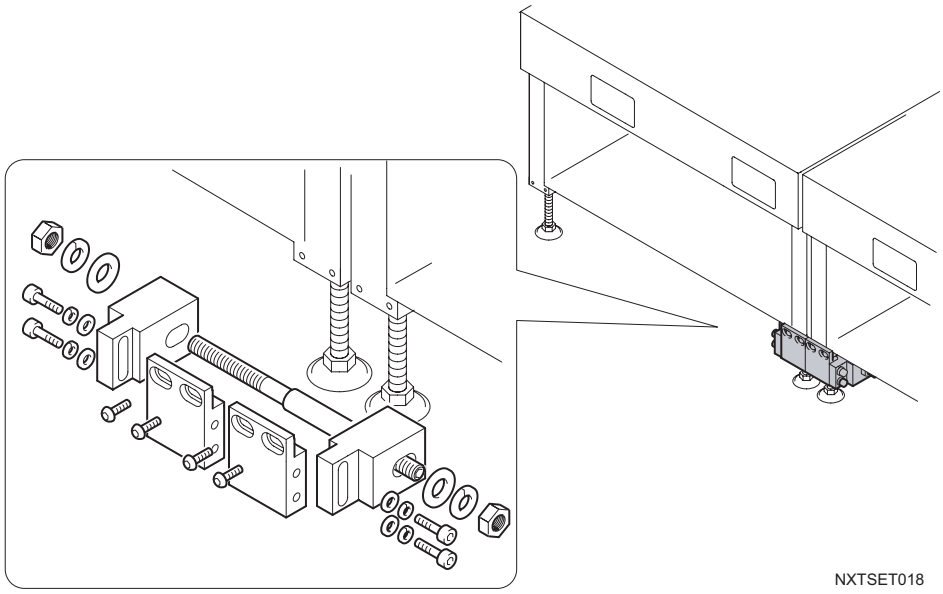

DWG. No.	Description	Qty.
PM39012	Bracket	2
PM39021	Bracket	1
PM39031	Bracket	1
PM39040	Bolt	1

Connection of Bases at the Rear

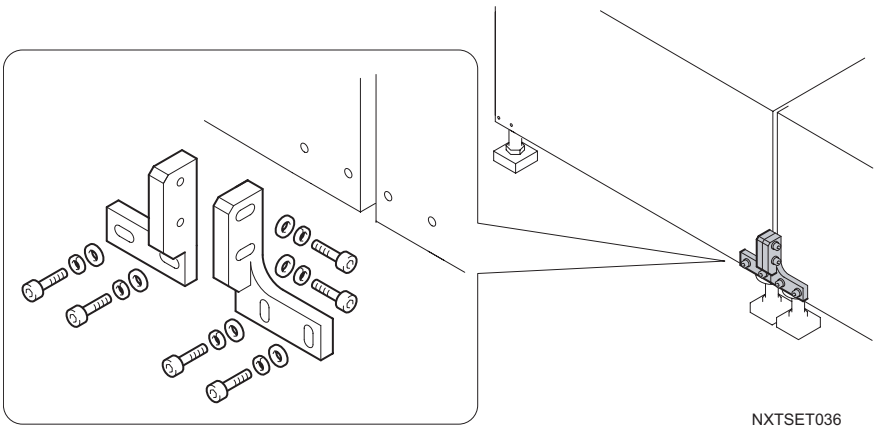

DWG. No.	Description	Qty.
PM21380	Bracket	1
PM21390	Bracket	1

3.9 Connecting an NXT Base to Other Machine Types

Follow the procedures below to connect an NXT to other machine types that are to be the next and previous stages.

Note: In the following explanations, the example NXT panel flow is left to right.

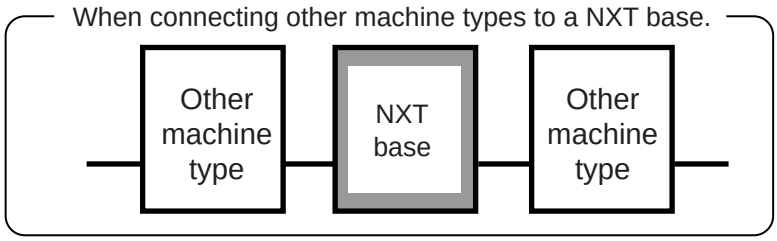

NXTBAS128E

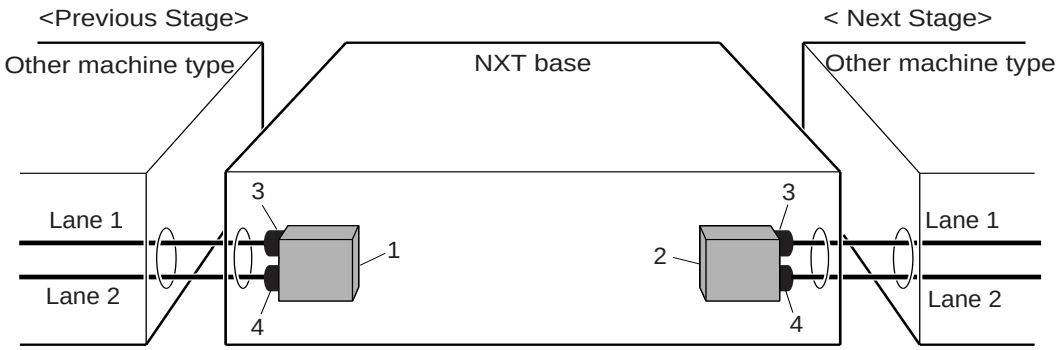

1. Previous stage panel loading I/F box
2. Next stage panel loading I/F box
3. Connector LANE1
4. Connector LANE2

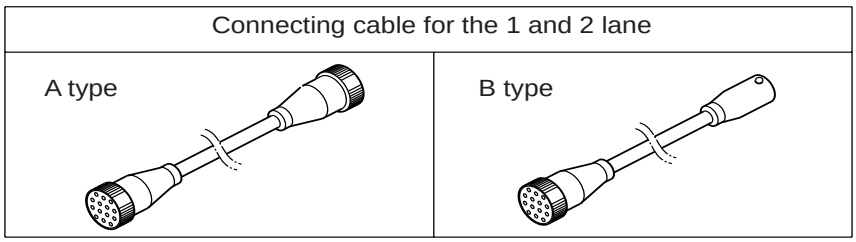

NXTBAS129Eb

3.9.1 Procedure

⚠CAUTION

Be sure to turn off the power to the machine before connecting or removing any cables.

Ensure that the connector position is correct by checking the connector label when connecting connectors.

Be sure to firmly secure the connectors together.

1. Either open the front cover, or remove the side cover of the base.

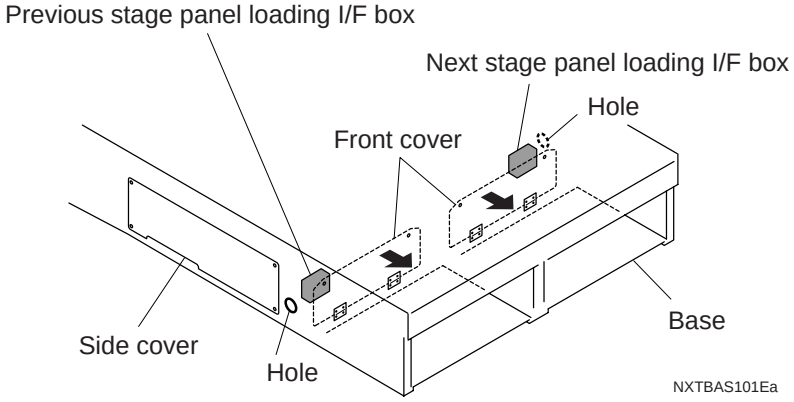

2. Connect the communication cables (A or B type) to the following connectors.
   - Connectors LANE1 and LANE2 of the previous stage panel loading I/F box.
   - Connectors LANE1 and LANE2 of the next stage panel loading I/F box.

Note: Select proper communication cables and harnesses for the previous/next stage machines.

3. Keep the connectors (RH0067* and RH0070*) attached to CN-M1 in the previous stage panel loading I/F box and CN-M2 in the next stage panel loading I/F box.

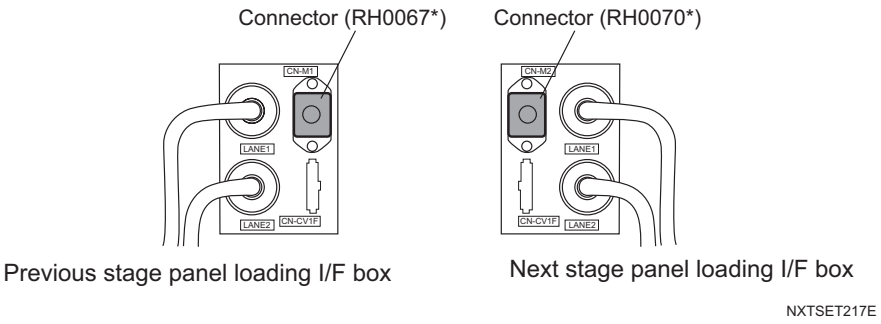

4. Gently pull out the connected cables (1 or 2 cables each for both the previous and the next stage) from the hole at the side of the base, and then connect it (or them) to "send next stage input signal" terminal of the previous machine, or "send previous stage output signal" terminal of the next machine.

3.9.2 Signal Cable Connecting Diagram (Other machine type - NXT - Other machine type)

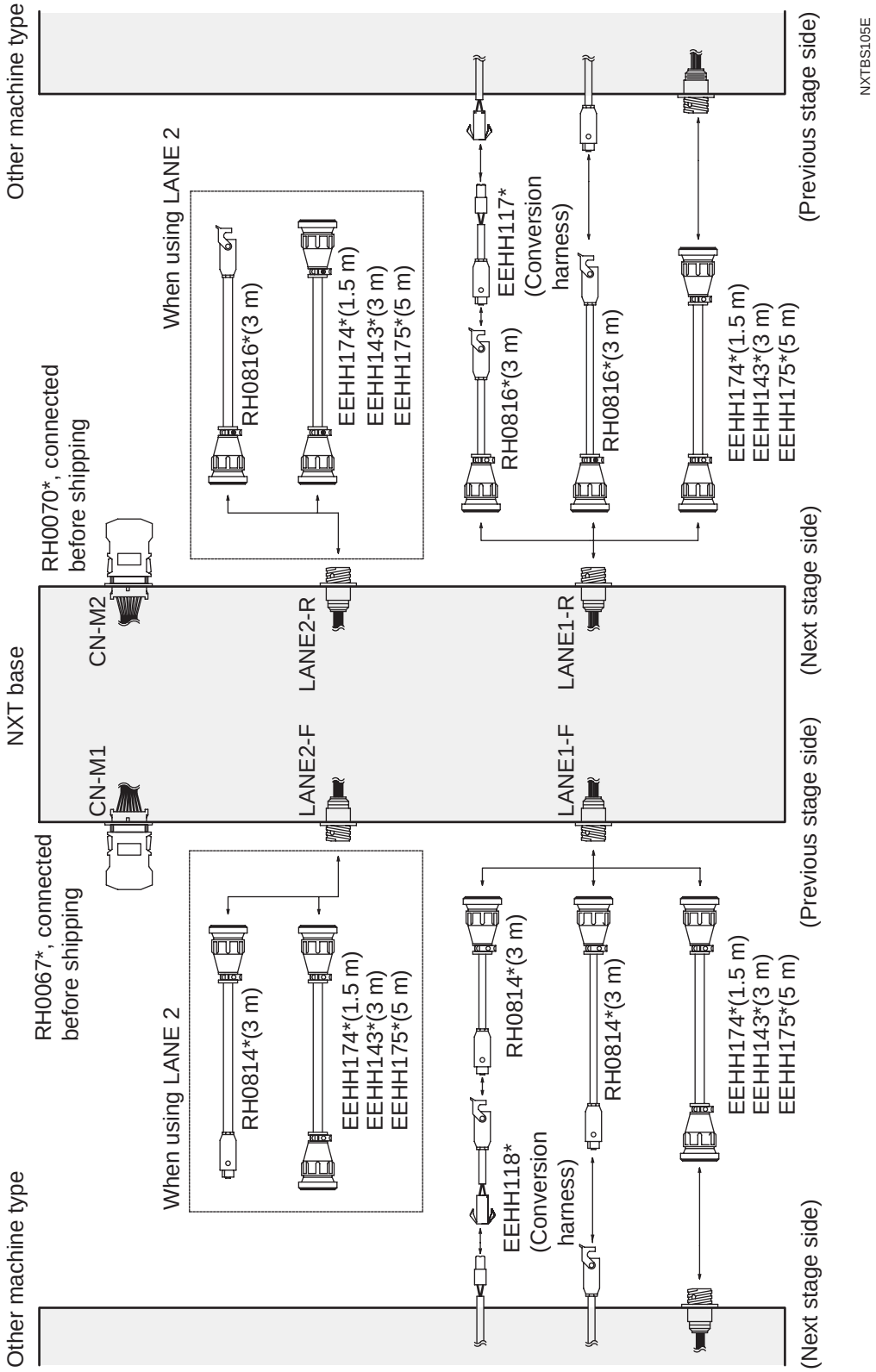

3.10 Tray Unit-L

Perform the following procedures to adjust the height and levelness for a new tray unit-L, or a tray unit-L which is being used at a particular machine for the first time. Once tray unit-L height and levelness adjustments have been made for that machine, it is not necessary to perform adjustments again when removing or attaching the tray unit-L.

3.10.1 Adjusting the Height and the Levelness

Two level gauges are needed to perform the procedures listed below. First, perform a preliminary adjustment of the height and levelness of the tray unit-L when it is removed from the machine. Then, attach the tray unit-L to the machine and perform final adjustments.

1. Release the left and right lock levers located near the bottom of the tray unit-L.

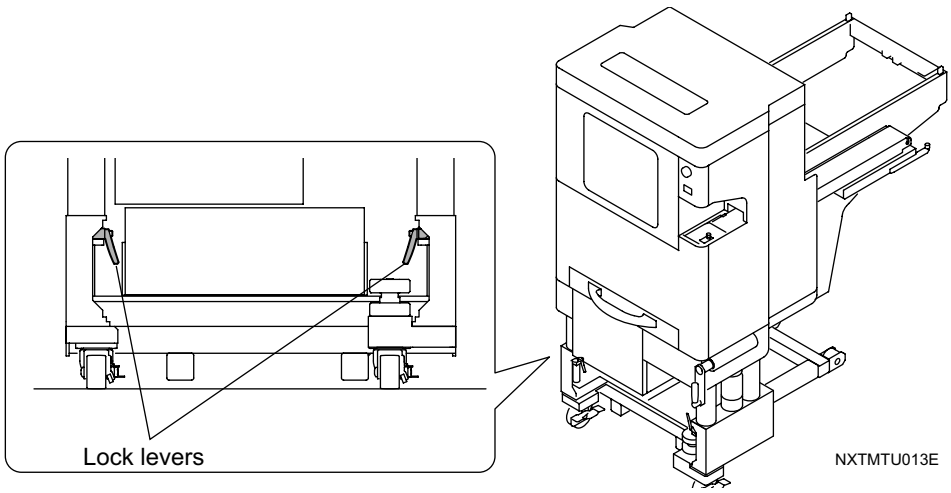

2. Turn the handle to adjust the height of the tray unit-L until the roller to match with the groove of the part supply base.
   Do not insert the tray unit-L into the NXT yet.

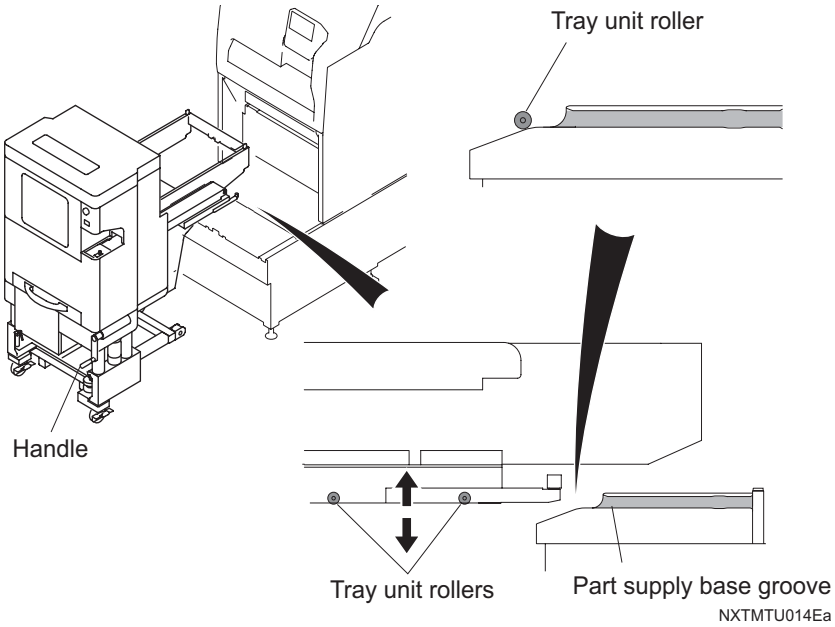

3. Place 2 levels on the lower plate of the tower inside the tray unit-L.

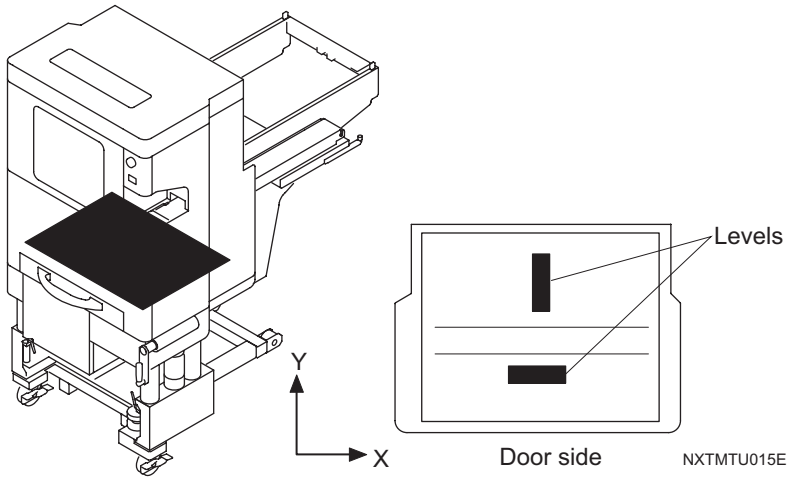

4. Loosen the lock knob on the bottom of the tray unit-L by turning it to the left. While looking at a level gauge, turn the adjustment knob until the tray unit-L is level in the X-direction.

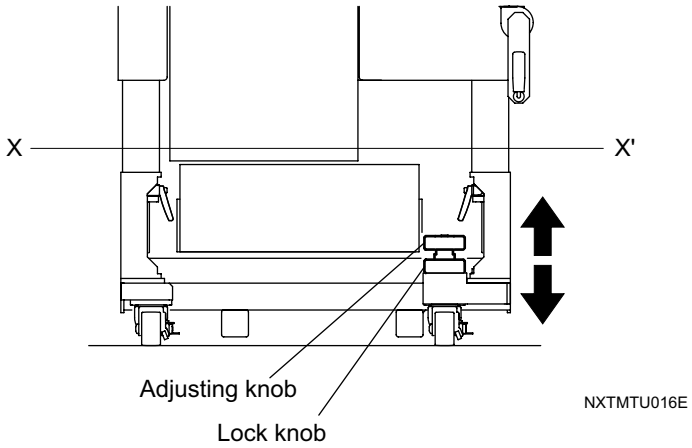

5. With the power to the machine on, carefully insert the unit into the machine. Once fully inserted, the tray unit-L is automatically clamped.

6. While looking at a level gauge, turn the adjustment knob and ensure the the machine is level in the X-direction.

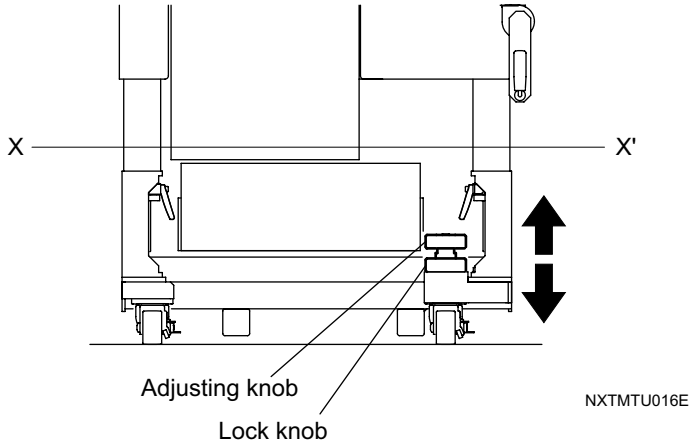

7. Tighten the lock knob by turning it to the left.
8. While looking at a level gauge, turn the handle to adjust the tray unit-L until it is level in the Y-direction.

Caution: As the tray unit-L is clamped in the machine, the connector pins can be damaged when the height of the tray unit-L is changed. Care should be taken when adjusting the height.

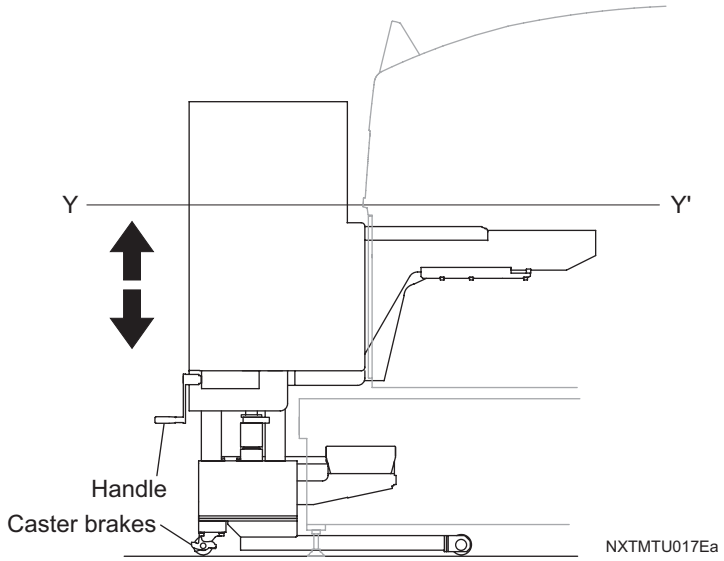

9. Tighten the left and right lock levers.
10. Lock the left and right caster brakes.

4. Setting Up NXT Machines in Flexa

4.1 Introduction

The factory must be set up correctly to enable communication between the NXT machines and Fuji Flexa. In addition, this data is also used by the Accessory Software server to communicate with the NXT machines. Information entered during line set up is also brought into a job to create the job line configuration. This means that once the NXT machines are properly setup, it is simply a matter of bringing an entire line into a job to add the NXT machines. This ensures the machines will match that of the factory/line. Line Editor is used to set up the NXT machines and is accessed from within Director.

The biggest difference between setting up a line with NXT machines versus other Fuji machines, is the way the line is comprised. For other Fuji machines, each machine represents a separate machine in the line. For the NXT, multiple bases that are next to each other are set up as one NXT “machine” even though the bases are separate. This means that it is quite possible that there will be only one “machine” in a line with just NXT machines. Flexa handles these grouped bases/modules as one machine for line balancing, optimizing, and transmission.

4.2 General Procedures

4.2.1 Creating a factory

Use the procedures below to create a new factory. This is not necessary if the new line is to be set in an existing factory.

1. Click [Factory Lines] from the [View] menu.
2. The group list pane displays the groupings and items in a hierarchical format. The group contents pane displays the contents of the selected item. When setting up the factory for the first time, the group list pane will only have the [System] group. Right-click in the group contents pane and select [New] – [Factory…].
3. The [New Factory] dialog box displays. Enter the new name for the factory in the text box and click [OK].
4. The new factory displays in both panes. Click the new factory and the lines display in the group contents pane.

4.2.2 Creating a line

1. With a factory in the group pane selected, right-click in the group contents pane and select [New] – [Line…] to display the [New Line – Fuji Flexa] dialog box.
2. Enter a line name in the [Line name] text box.
3. Select the option for the line status. A virtual line is a line that does not actually exist. An example of when a virtual line is used is when programmers are programming future jobs and the lines are different to the current ones due to factory restructuring. The virtual line can be used to create the line in the job and after the factory has been changed, the recipes can be transmitted to the machines.
4. Click [OK] and the new line displays in both panes.

4.2.3 Creating a machine

When adding the NXT machine to a line, remember that bases that are next to each other should be grouped together to form a single NXT “machine”. Up to 32 modules can be grouped together in this way.

1. With a line in the group pane selected, right-click in the group contents pane and select [New] – [Machine…] to display the [New Machine] dialog box.
2. The factory name and line name display in the top of the dialog box. Ensure that the names are correct. If the names are incorrect, select the correct name from the drop-down list.
3. If the [Display model names in line information] setting has been selected in Server Setup, enter the model name for the machine in the [Model name] group. This is used to decide if a recipe can be transmitted to a certain machine or not. If the model name does not match the name of the machine in the job, then transmission is not possible. If the [Display model names in line information] option has not been selected, then [Model name] does not display.

Note: The same model name in a line should never be repeated within the same line even for a machine in the line configured the same. Same model names can only be used across lines.

4. Select “NXT” for the machine type from the drop-down list.

Note: If the NXT machine type does not exist, then it is possible that the license has not been upgraded, and the modules and settings have not been upgraded with the new license. Upgrade the license and then upgrade the modules and settings for the Director computers using the license upgrade.

5. Select the line machine order. If this is the first machine, then only one option is available.
6. Enter the machine nickname. This displays in Transmission Control and in the group list. If the [Display model names in line information] option has not been selected, then this must match the name of the machine in the job to enable transmission.

Note: Machine nicknames cannot be repeated and must be unique for each machine.

7. Click [OK] to close the dialog box when data entry for the machine is complete. The [Edit Machine] dialog box displays.
8. Click [Edit Base] and the [Edit Base] dialog box displays.
9. By default one row for a base displays. Double-click the data field for the first row in the [Base Name] column and the [Enter Computer Name] dialog box displays.
10. Enter the IP address or network name for the first base and click [OK]. It is also possible to browse the network for the base by clicking [Browse].
11. Double-click the data field for the first row in the [Machine Communication Server} column and the [Enter Computer Name] dialog box displays.
12. Enter the IP address or network name for the computer with the communication server to be used for communicating with the machine and click [OK]. It is also possible to browse the network for the computer by clicking [Browse].

13. Double-click the data field for the first row in the [Base Type} column and select the base type from the drop-down list. When the base type is selected the diagram in the [Base Image] group is updated.

Note: If this NXT base is already connected to the network, set up, and turned on, then the base type can be automatically determined by clicking [Load Base Type]. The line the machine is being set up on must be a real line for this command to be available.

14. Click [Add] and a new row displays.

15. Double-click the data field for the new row in the [Base Name] column and the [Enter Computer Name] dialog box displays.

16. Enter the IP address or network name for the next base and click [OK]. It is also possible to browse the network for the base by clicking [Browse].

17. Double-click the data field for the new row in the [Machine Communication Server} column and the [Enter Computer Name] dialog box displays.

18. Enter the IP address or network name for the computer with the communication server to be used for communicating with the machine and click [OK]. It is also possible to browse the network for the computer by clicking [Browse].

19. Double-click the data field for this row in the [Base Type] column and select the base type from the drop-down list. When the base type is selected the diagram in the [Base Image] group is updated.

20. Repeat steps 14 to 19 until all of the bases that are to be grouped together have been added.

Note: Use [Up] and [Down] to change the base order if necessary.

21. Click [OK] and the [Edit Machine] dialog box is updated to display the added bases.

22. Enter the necessary settings for the three top options in this dialog box. The chart below explains the meanings of the different settings.

Field Label	Meaning
Get Production Data	If set to “Yes”, production data for Line Monitor and Line Reporter is obtained for this machine. If set to “No”, then production data for this machine is not obtained.
Board Flow	Specifies the direction that the panels are conveyed through the NXT.
Conveyor Type	Specifies the type of conveyor that is present in the NXT. “Dual” means that a double conveyor system is installed in all of the modules. “Single” means that a single conveyor system is installed in all of the modules.

23. It is possible to check and change the settings for the different bases by clicking the plus in front of the base name. The settings for that base then display. The chart below explains the meanings of the different settings.

Field Label	Meaning
Base Name	Specifies the IP address or the network name of the base. This is necessary to enable communication with the base.
Base Type	Specifies the number of open positions that are on the base. This specifes the type of base.
Machine Communication Server	This is the name of the computer that is running the Machine Communication Service. This computer also runs the Line Monitor Server and Transmission server.

24. After specifying the communication settings for the machine, click [Save] and then [Close] to close the [Edit Machine] dialog box.

25. If the line was a “real line” then a dialog box displays with a message regarding updating the transmission server. Click [Yes] to update the transmission server with the new information.

5. Accessory Software Installation

5.1 Introduction

This software is required to perform the special non-production commands on the NXT and must be installed on a computer. The Accessory Software system uses a server/client system with one Accessory Software server being installed on a computer and Realtime Workingrate Buffer services being installed on the Fuji Flexa communication servers used for the NXTs. Accessory Software clients then connect to the Accessory Software server and this server is connected to the Realtime Workingrate Buffer Services which collect the data from Fuji Flexa. The Accessory Software server is responsible for the communication between all the clients. The client computers connect to the Accessory Software server through Internet Explorer 5.5 (service pack 2 or higher) or higher. Due to this, software management of this software is much easier because no special software is installed on the client computers. Only the server computers need to be changed when upgrading.

The server computers get the information about the available NXT machines from the line settings made in Fuji Flexa. Once the NXT machines have been registered in Fuji Flexa, Accessory Software is able to connect to them. Fuji Flexa must be installed on the Accessory Software server computer in order to allow the server to connect to Flexa. A full Fuji Flexa installation is not required. It is sufficient if a "Fuji Flexa External Components" installation is performed on the computer.

Note: If this software has been already installed for use with NXT within the same Fuji Flexa User Server, then the steps in this chapter do not need to be performed.

5.1.1 Installation outline

The steps below outline the major items that should be performed when installing Accessory Software. Refer to the section referenced below for details on that item.

- Install Fuji Flexa system and have set up the line configuration. To perform this, follow the procedures in chapter 4. "Setting Up NXT Machines in Flexa".
- Install Fuji Flexa on the computer for the Accessory Software server if it is not already installed. Follow the procedures in section 5.3 "Installing Fuji Flexa".
- Install the NXT Accessory Software Server software. Follow the procedures in section 5.4 "Installing the NXT Accessory Software Server" to install the Accessory Software server.
- Install the Realtime Workingrate Buffer Services on all of the Fuji Flexa communication servers being used to communicate with the NXT machines. Follow the procedures in section 5.5 "Installing the Realtime Workingrate Buffer Service" for how to install the Realtime Workingrate buffer service.

5.2 Required Items

The items listed below are required for installation.

- Fuji Flexa Installation CD-ROM (only if Fuji Flexa is not installed on the computer)
- Fuji Flexa Setup disk (License) (only if Fuji Flexa is not installed on the computer)
- NXT Application CD-ROM
- Windows 2000 Setup CD-ROM

5.2.1 Required hardware

Accessory Software Server

The computer that the Accessory Software is to be installed on is going to be the Accessory Software server and must have the required items listed below.

Item	Requirement
Operating system	Windows 2000 Server or Windows 2000 Professional (SP2 or later)
Processor	Pentium 3, 1 GHz computer or faster
Memory	256 MB or more
Hard disk	For set up, 1 GB or more of free disk space recommended
Display	VGA Monitor with resolution 800 by 600 and 65,536 colors (16 bit) or higher
Network	Correctly configured TCP/IP network
Browser	Microsoft Internet Explorer 6.0 (SP1 or later)
Other	Mouse Keyboard Floppy disk drive CD-ROM drive

Realtime Workingrate Buffer Service

The computer that the Accessory Software is to be installed on is going to be the Accessory Software server and must have the required items listed below.

Item	Requirement
Operating system	Windows 2000 Server or Windows 2000 Professional (SP2 or later)
Processor	Pentium 3 1 GHz computer or faster
Memory	256 MB or more

Item	Requirement
Hard disk	For set up, 1 GB or more of free disk space recommended
Display	VGA Monitor with resolution 800 by 600 and 65,536 colors (16 bit) or higher
Network	Correctly configured TCP/IP network
Software	Fuji Flexa Communication Server installed and running
Browser	Microsoft Internet Explorer 6.0 (SP1 or later)
Other	Mouse Keyboard Floppy disk drive CD-ROM drive

5.3 Installing Fuji Flexa

This must be installed before installing Accessory Software. If Fuji Flexa is already installed on the computer then proceed to the next section. It is not necessary to install a “complete” Fuji Flexa installation, a “Fuji Flexa External Component” installation is sufficient. For detailed information on installing Fuji Flexa, refer to the “Fuji Flexa Setup Manual”.

If NXT accessory software installation is attempted on a computer without Fuji Flexa installed, the message shown below displays.

1. Insert the Fuji Flexa Installation CD-ROM into the CD-ROM drive.

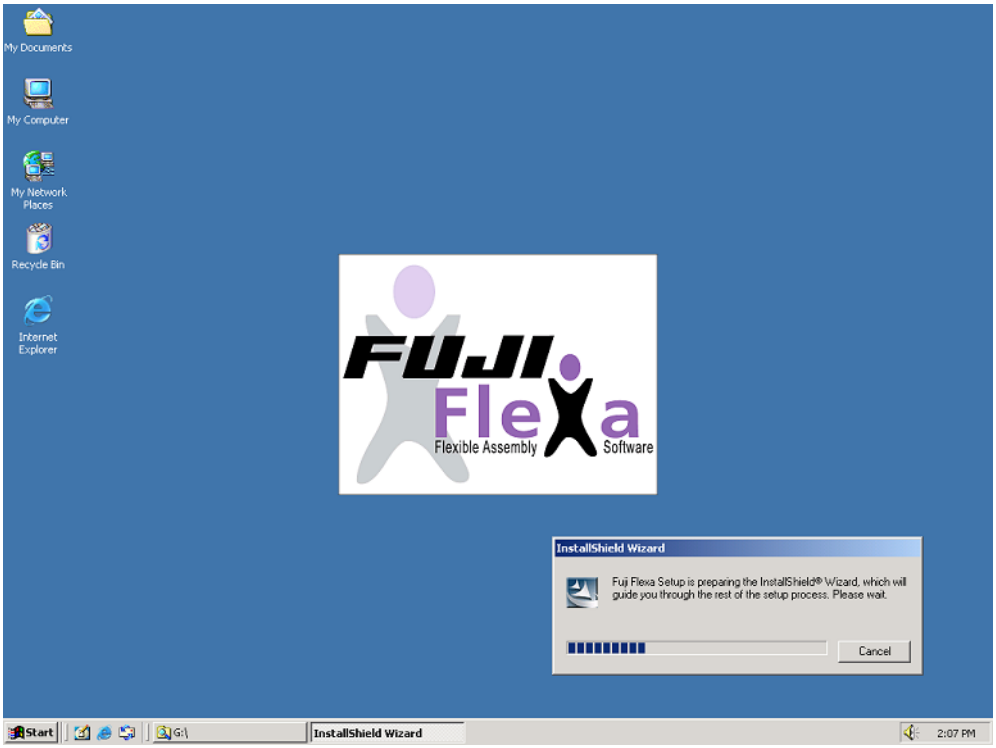

2. Click [Next] to display the next step of the installation process.

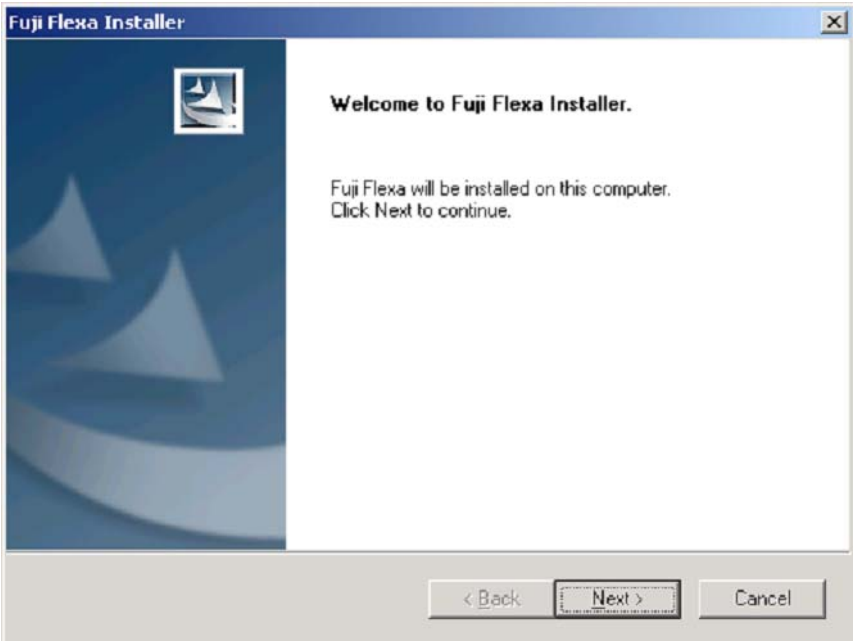

3. Read the Fuji Flexa License Agreement carefully and click [Yes] to accept the terms of the agreement to display the next step.

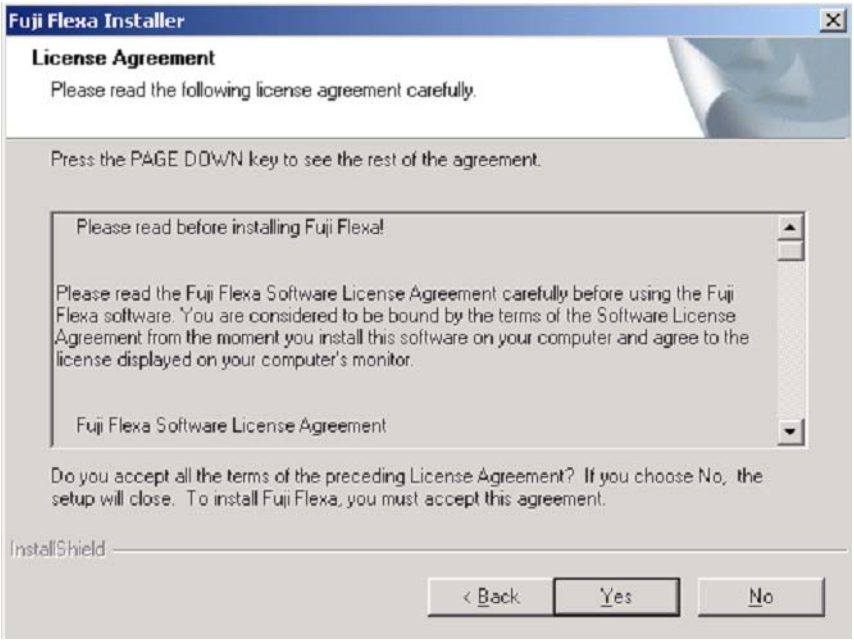

4. Select [No] and then click [Next] to display the next step.

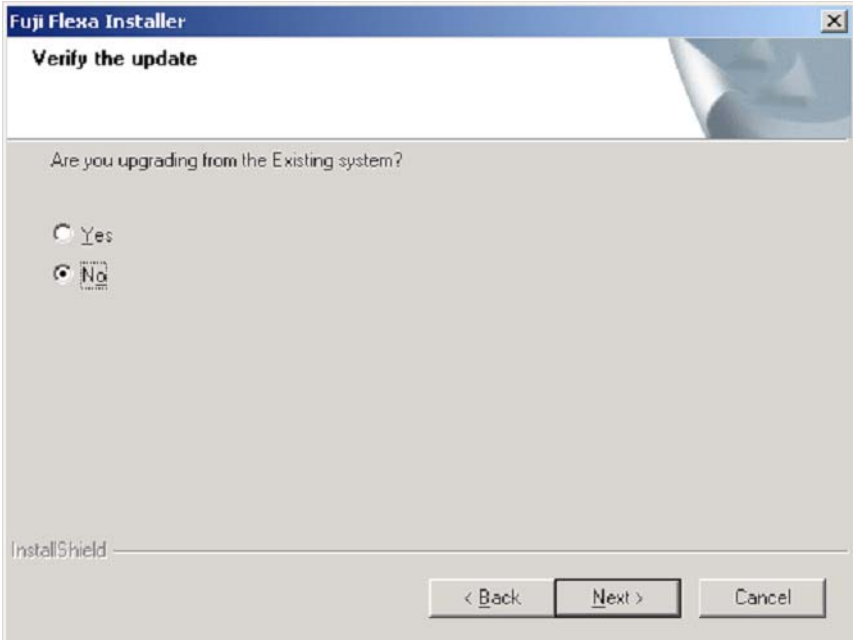

5. Insert the Fuji Flexa Setup Disk in the floppy disk drive and click [Next] to display the next step.

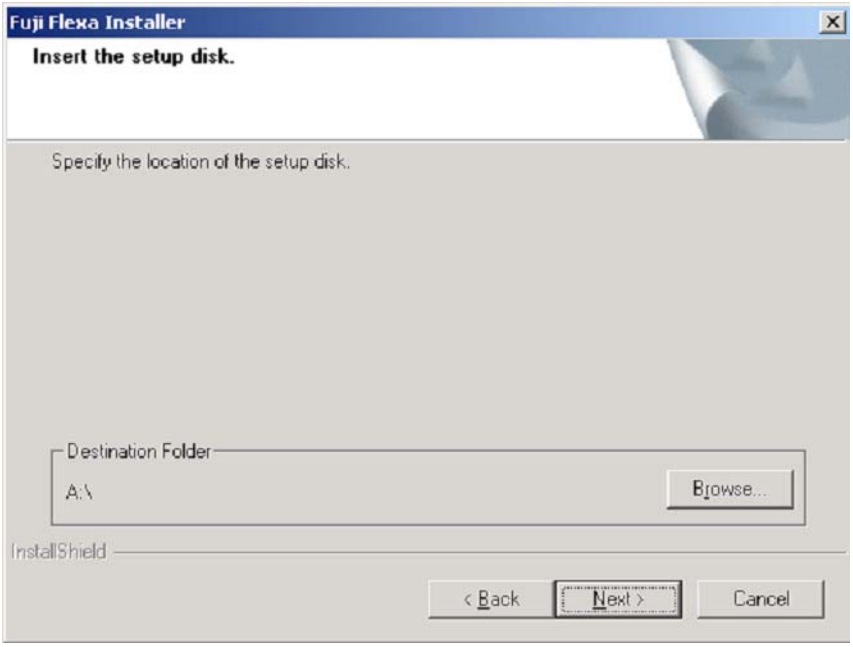

6. Select [Fuji Flexa External Component Installation] and click [Next].

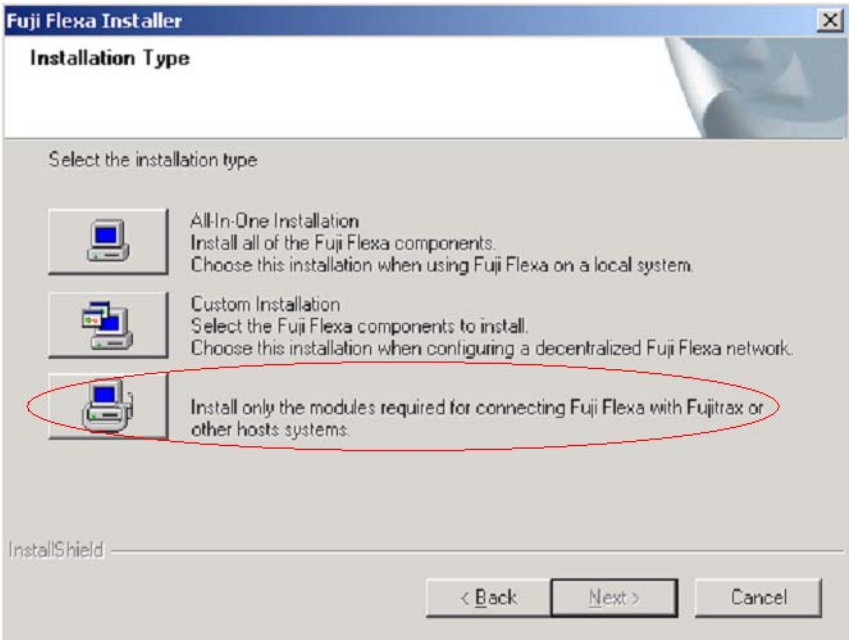

7. Select the installation destination folder and click [Next] to display the next step.

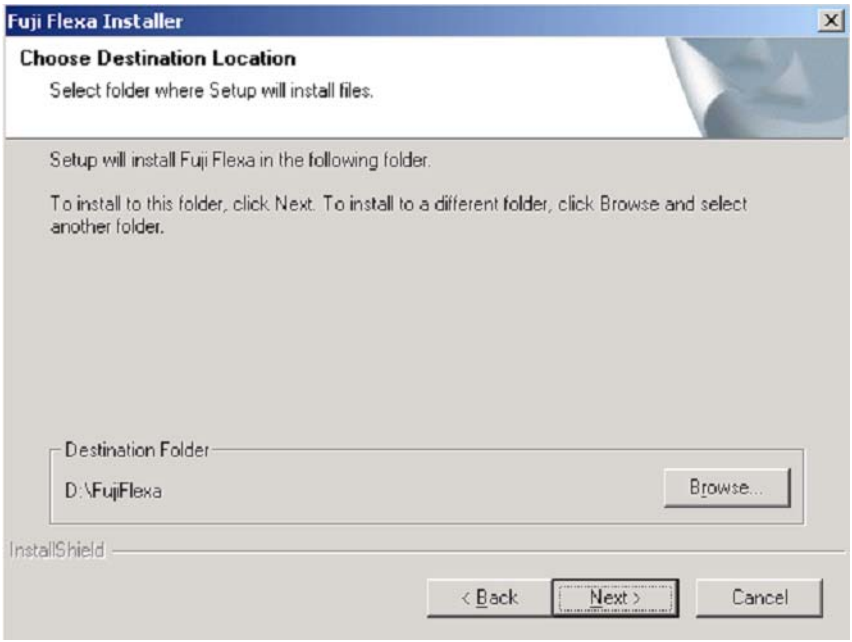

8. Specify the name of the computer being used as the User Server and click [Next] to display the next step.

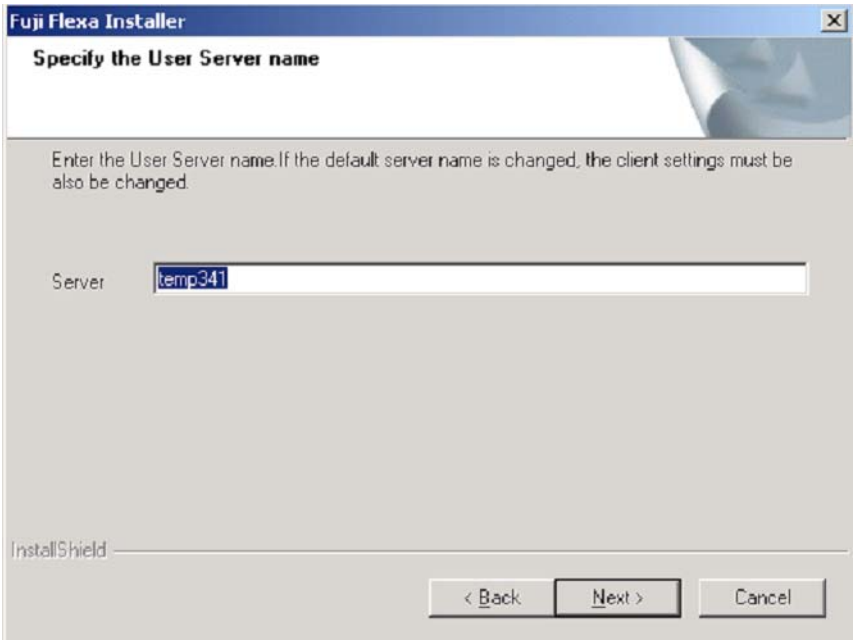

9. Confirm the server setting is correct and click [OK] and then click [Next] to continue.

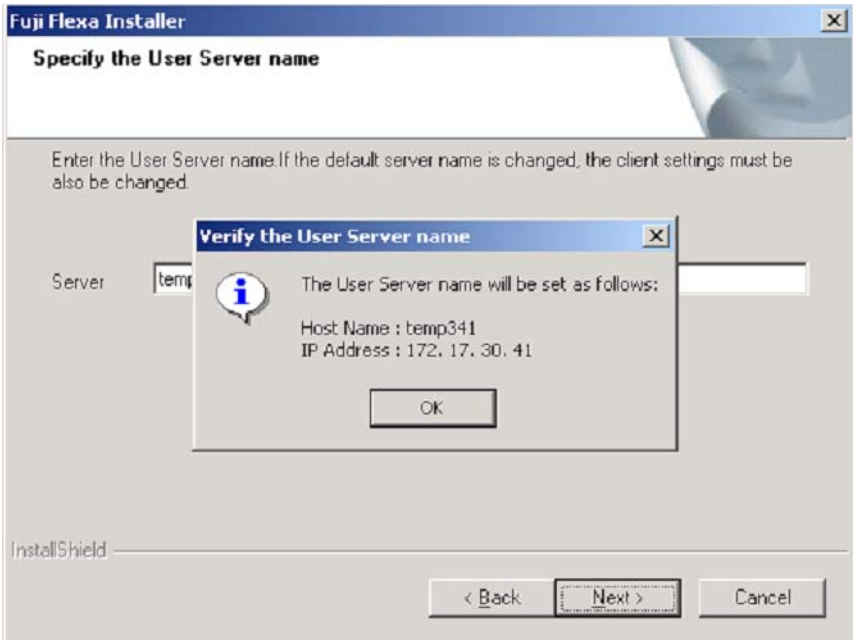

10. Select the folder for the Fuji Flexa startup menu shortcuts and click [Next].

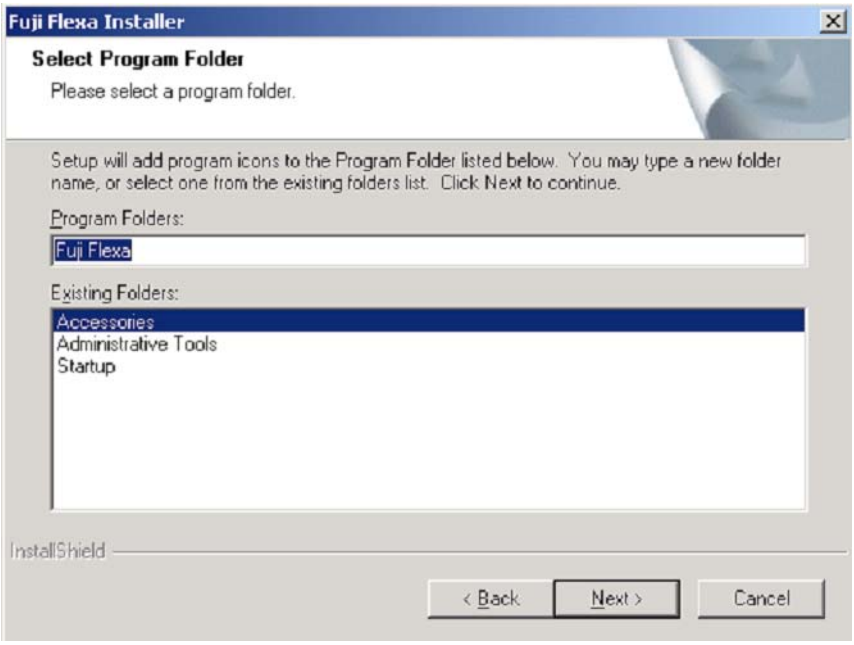

11. None of the machine communication components need to be installed. Ensure that the check boxes in this step are cleared and then click [Next] to display the next step of the installation process.

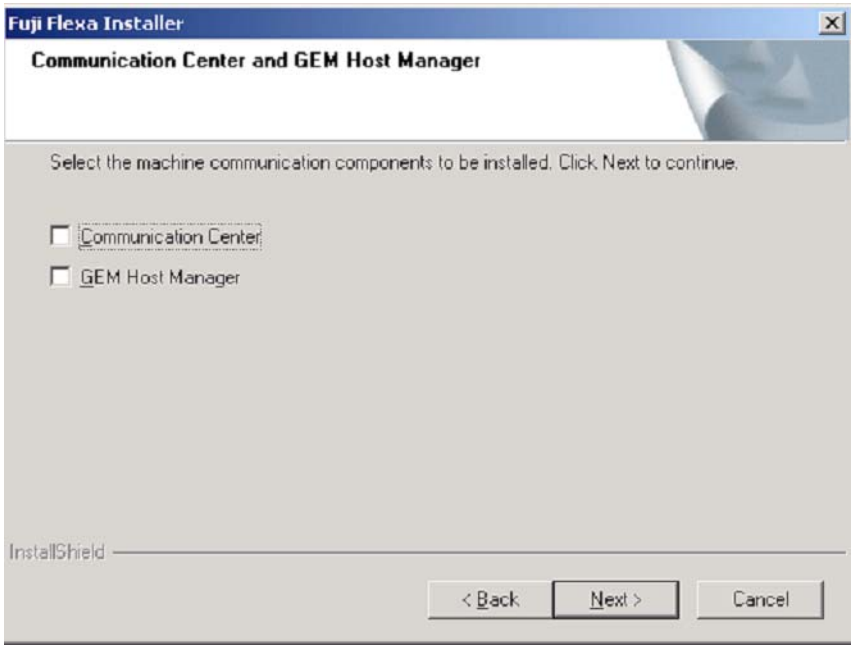

12. The installer now has the information necessary to install Fuji Flexa. Check the settings and click [Next] to start the installation process.

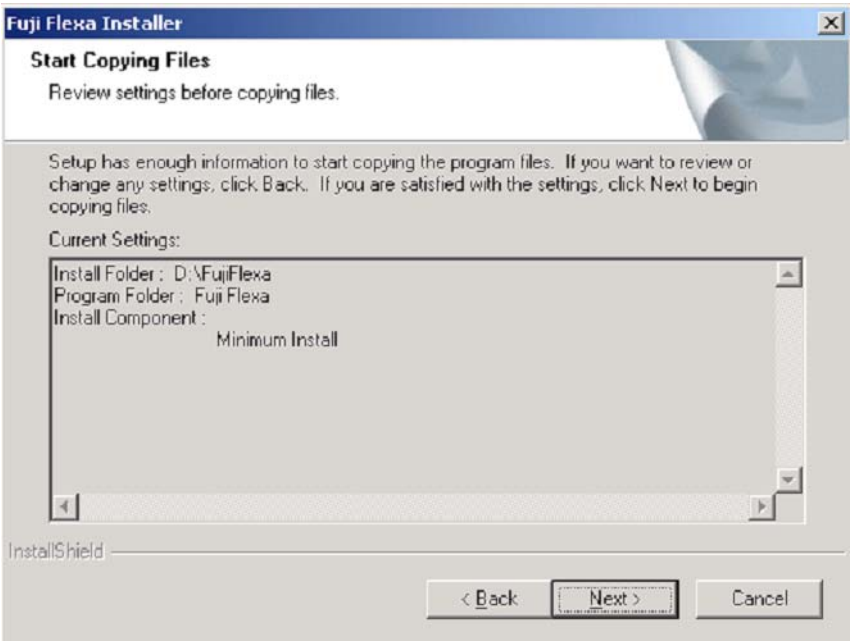

13. The files necessary for the specified installation type are installed.

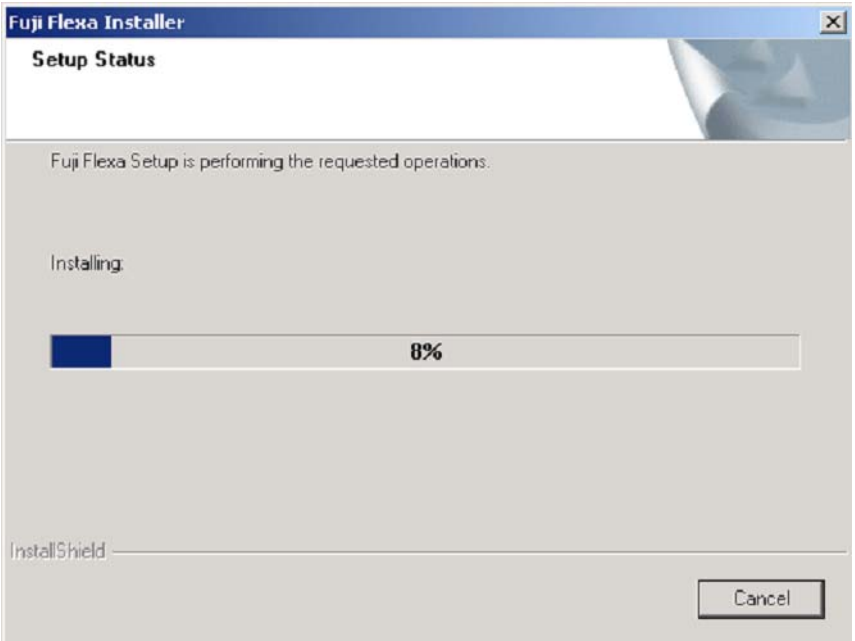

14. The installation of the necessary services is performed.

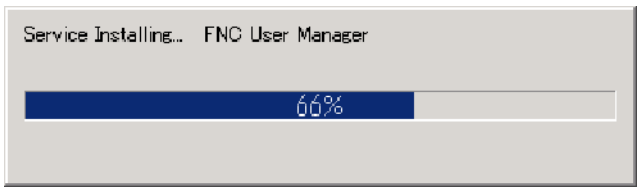

15. Click [Finish] to restart the computer and complete the installation procedure.

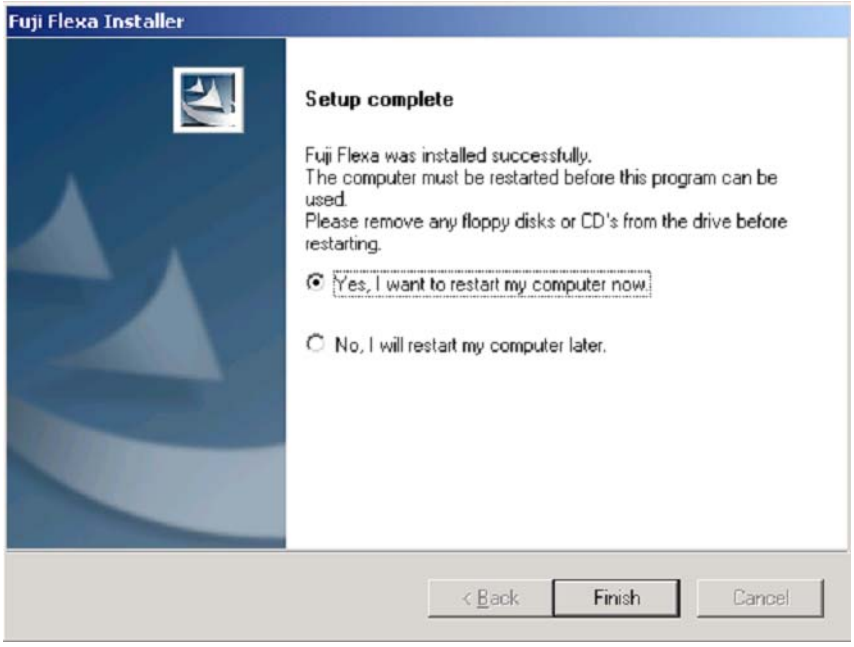

5.4 Installing the NXT Accessory Software Server

This process can be performed once Fuji Flexa is installed on the computer.

1. Insert the NXT Accessory Software CD-ROM into the CD-ROM drive.

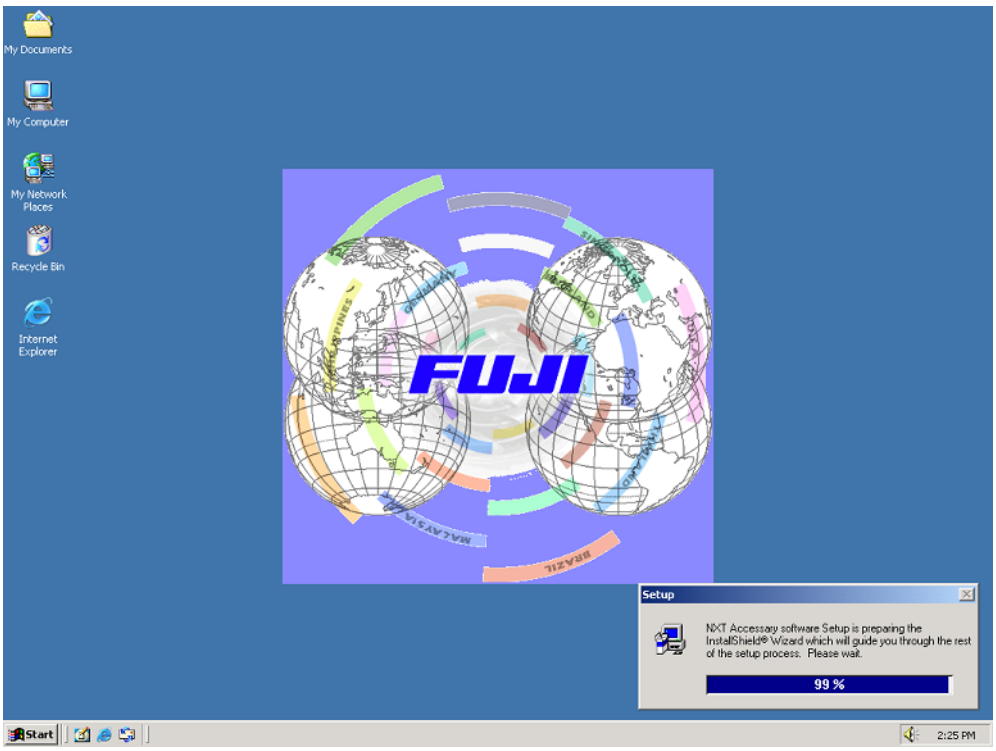

2. Click [Next] to start the installation process.

3. Select the installation destination folder and click [Next].

4. Enter a virtual directory name and click [Next].

5. Select the check boxes for the .NET Framework option if .NET Framework is not installed on the computer. If the Fuji Flexa version is not current, select the Flexa Patch File check box. Click [Next] to proceed to the next step after all of the necessary options have been selected.

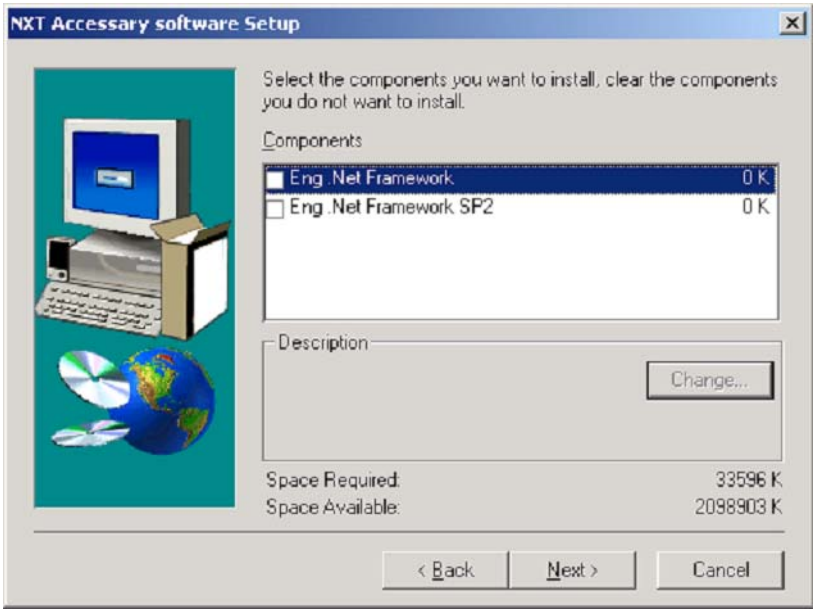

6. A progress bar displays and some services are stopped.

7. The NXT accessory software is installed on the system with the specified options.

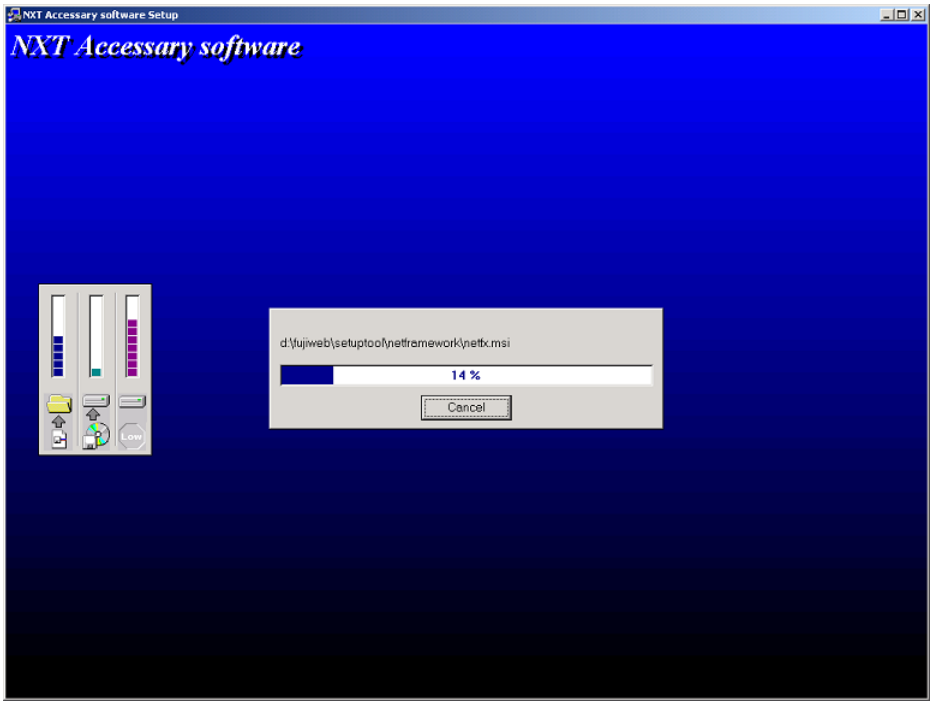

8. The installation for IIS automatically starts.

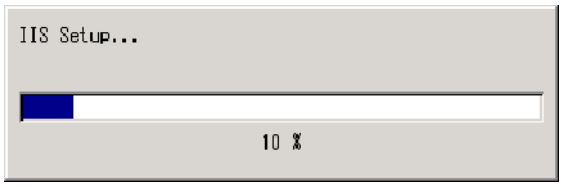

9. Click [Next] to go to the next step of the component wizard.

10. The component wizard starts configuring and installing components.

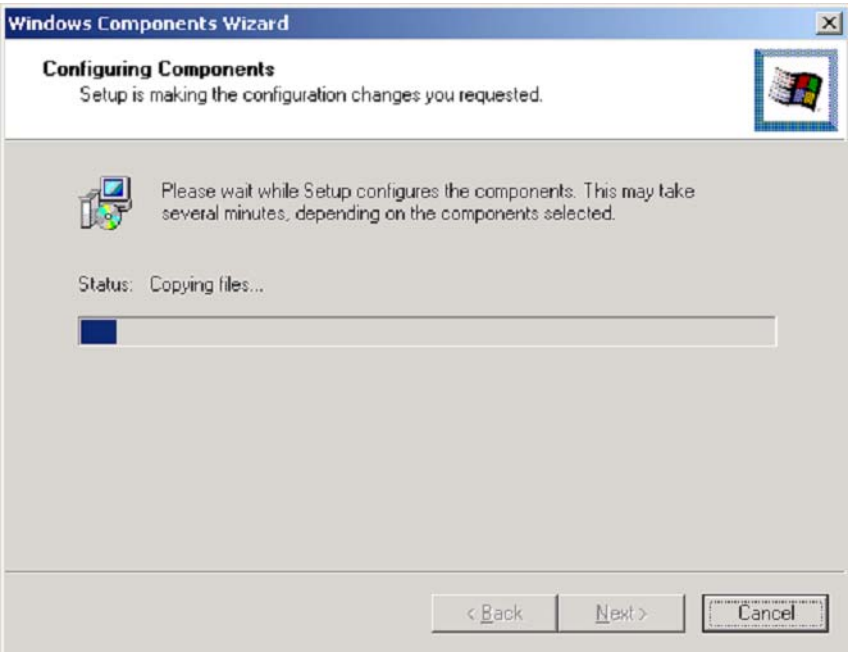

11. Insert the Windows 2000 Professional CD-ROM into the CD-ROM drive when requested. Specify the file destination and click [OK] to continue.

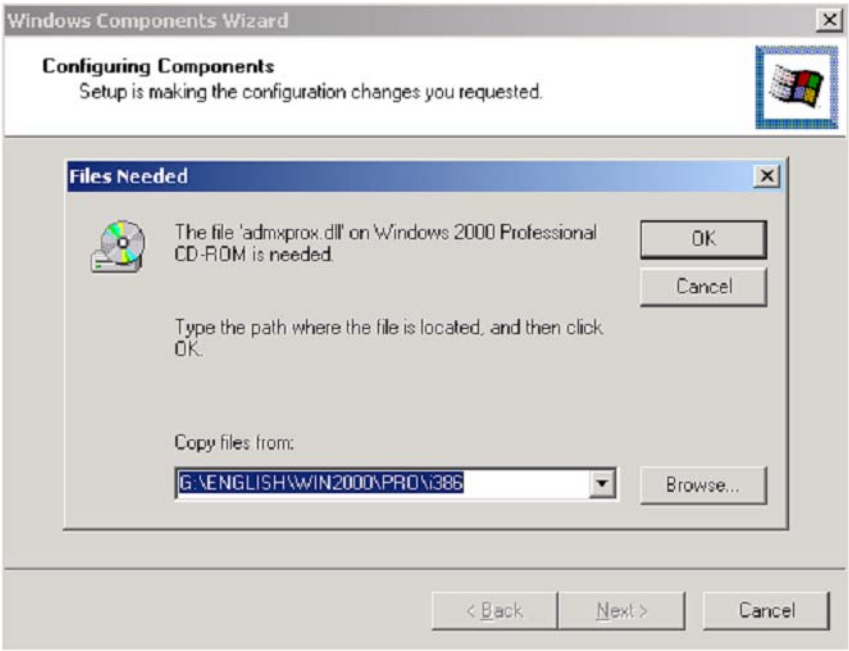

12. IIS files are copied and installed.

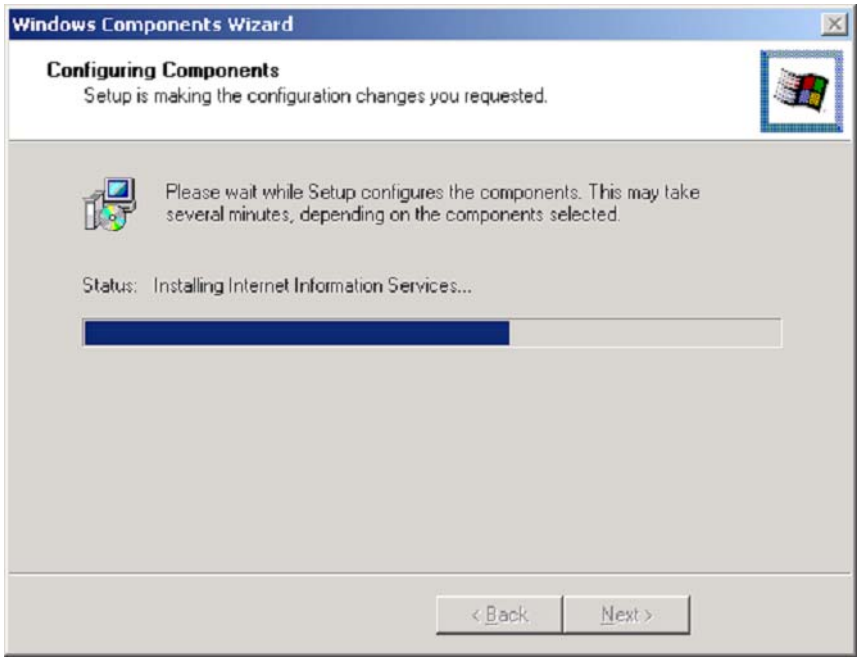

13.Once IIS has been installed, the dialog box below displays. Click [Finish].

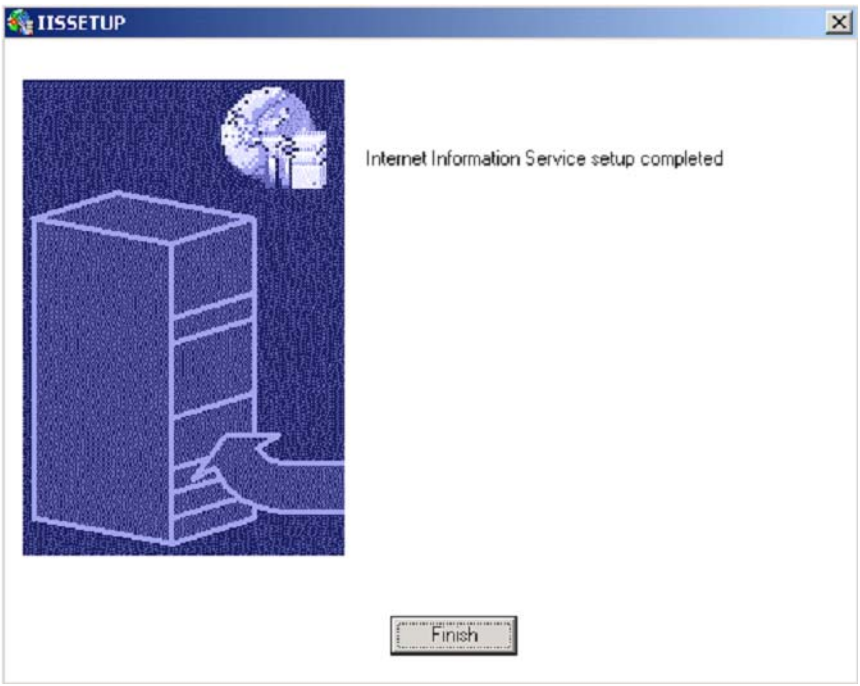

14.A progress bar displays and some services are started.

15. Click [Next] to proceed with the .NET Framework installation.

16. The .NET Framework files are installed.

17. Click [OK] to complete the installation.

18. The .NET Framework SP2 installation automatically starts and installs that software if that option was selected.

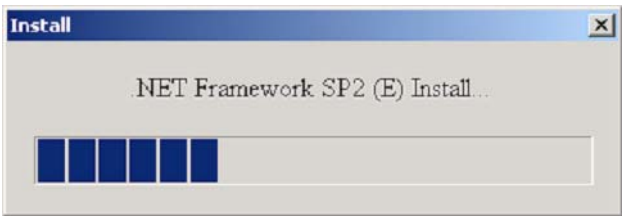

19. Click [Finish] to complete the installation process.

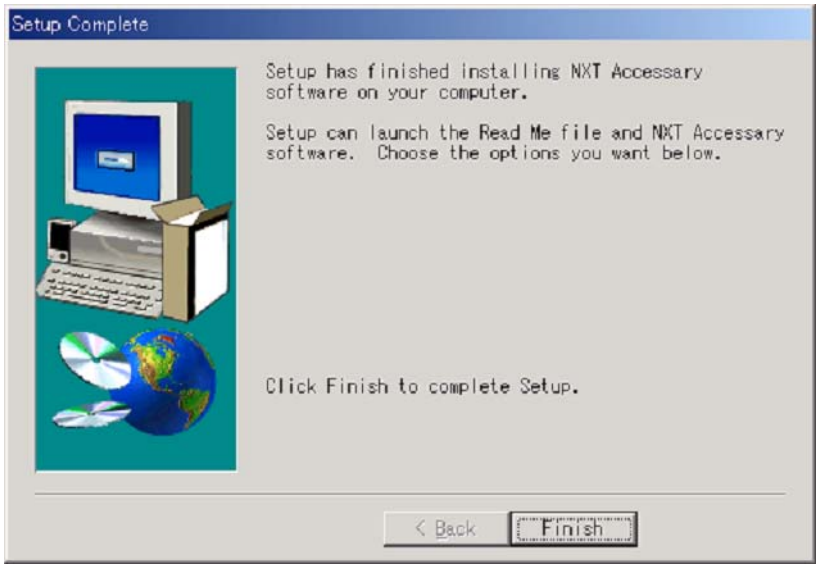

5.5 Installing the Realtime Workingrate Buffer Service

The Realtime Workingrate Buffer Service (RWB service) must be installed on all Fuji Flexa communication server computers that are used for NXTs. This process can be performed once the Accessory Software Server has been installed and is running. The Accessory Software server is accessed through the web browser and the necessary software is downloaded and installed from this server.

1. Double-click the [Internet Explorer] icon on the desktop of the computer running the Fuji Flexa communication server for a NXT.
2. Enter the address (URL) "http://<NXT accessory software server name>/fujiweb" and then press Enter. If the server computer is located and the server is running, a loading page displays. Once the necessary items have been loaded, the [Home] page displays. This page provides basic information on the NXT machines.
3. Click [Service List] from the header in Floor Monitor.
4. Click [Download] at the bottom of the screen. The screen changes to the donwload screen.
5. Click [Download] to start the download process.
6. Click [Open] in the dialog box that displays. This option means that the software will be downloaded to the computer and the installation process will automatically start. If [Save] is selected, the installer will only be downloaded and saved on the computer, not automatically started after the save location is specified.
7. Click [Yes] in the message box that asks if the RWB service should be installed. If the service has already been installed, a second message displays, asking if the service should be updated with the downloaded service.
8. Select the installation destination folder and click [Next]. The software is installed.
9. Click [Finish] to complete the installation process. It is necessary to restart the computer to start the service.

MEMO:

6. Setting Up Fujitrax Verifier

6.1 Introduction

Fujitrax Verifier is used to perform two main functions. The first main function is feeder/part verification. The other major function is parts management. There are many other functions available through Fujitrax Verifier, however these will not be covered in this manual. For information on Fujitrax functions, refer to the Fujitrax Verifier Operation Manual.

Fujitrax Verifier must be properly set up and running before performing the steps in this chapter to connect to the NXT machines. Follow the steps below to set up an already installed and configured Fujitrax system to work with the NXT. Setting up and configuring a complete Fujitrax is not covered in this chapter. For details on setting up and configuring Fujitrax Verifier or more details on the items covered in this chapter, refer to the Fujitrax Verifier Operation Manual.

6.2 Required Items

In order to use Fujitrax Verifier with the NXT, there are several required items.

- Fujitrax Verifier Central Server must be installed and running on the computer with the Kit Server.
- The NXT must be added to the line configuration for the computer with the Kit Server.
- The NXT Fujitrax configuration setting must be turned on.
- The NXT user must be added to the Kit Handy Settings when using Kit Handy.

Follow the procedures below to perform these actions.

6.2.1 Setting up and running the Central Server

The Central Server requires no special installation steps when installing the Kit Server. This software is automatically installed when a compatible Kit Server version is installed on a computer. However, the settings for the Central Server must be specified such as the master database service name. This software should always be running whenever the computer is on because it is a service.

1. On the computer with the Kit Server installed that is to be used for NXT machine, open the Fuji Central Server Settings program by using the shortcut in the start up menu. When selected the [Fuji Central Server Settings] dialog box is displayed.
2. Enter “FUJIADMIN” in the [User ID] text box and then enter the appropriate password for this user ID.
3. Enter service name for the verifier database.
4. Specify the maximum desired log size for the Central Server from the [Log Size] drop-down list.
5. Leave the default setting for [Miss Prevention Timer].

6. Specify the desired setting regarding quick verification.

Setting	Meaning
Every time of removed feeder	This specifies that a quick verify check of a feeder and the parts must be performed before the feeder is set in the machine. This is required even if an ID (relationship) between the feeder and parts already exists.
Normal	This specifies that a quick verify is not required before a feeder is set in the machine, however an ID (relationship) between the feeder and parts set on the feeder must exist.

7. Click [OK] and then reboot the computer to enable the new settings.

6.2.2 Adding the NXT to the Fujitrax line configuration

Follow the steps below when adding the NXT to the Fujitrax Verifier line configuration.

1. Open the Kit Line Configuration program by using the shortcut in the start up menu.
2. Enter “FUJIADMIN” as the user ID and then enter the appropriate password and service name for the master database.
3. Click [OK] and the [Kit Line Configuration] window displays.
4. Select the Factory from the left pane and select [Add Line] from the [Edit] menu.
5. Specify the name of the NXT line in the [Line Name] data field and then specify the name of the computer running the central server for the NXT in the [KITServer Hostname] data field.
6. Click the new line in the left pane and the field updates to display the specified name.
7. Click [Add Machine] from the [Edit] menu. The right pane changes to display the data fields for the new machine.
8. In the [Machine Nickname] field, specify the name of the NXT machine. The name should match that used by Fuji Flexa for the machine.
9. Select [NXT] from the [Machine Type] drop-down list.
10. In the [Recipe Name, Top] and [Recipe Name, Bottom] fields enter the name of the base. It does not matter that these settings are the same, because the NXT does not use these settings. However, some value must be entered in these fields or an error will occur when trying to save the line configuration.
11. Specify the board flow direction and the parts out settings in the appropriate fields.
12. Enter the name of the computer running the Central Server for this base in the [Central Server Name] field. This should match the name used for the Kit Server for the line.
13. Enter the name of the computer running the Accessory Software server in the data field for [Maintenance Server Name].
14. Click the new machine in the left pane and the machine name updates to display the specified name.

15. Click [Add Base] from the [Edit] menu. The right pane changes to display the data fields for the new base.
16. In the [Base Name] field, specify the name of the first NXT base for the machine.
17. Specify the base type using the [Base Type] drop-down list.
18. Click the new base in the left pane and the base name updates to display the specified name.
19. Click [Add Module] from the [Edit] menu. The right pane changes to display the data fields for the new module.
20. Specify the module type by using the [Module Type] drop-down list.
21. Click the new module in the left pane and the module name updates to display the specified module type.
22. Repeat steps 19 to 21 until all of the modules for that base have been specified.
23. Click the base, and if the NXT machine is comprised of multiple bases, click [Add Base] from the [Edit] menu. The right pane changes to display the data fields for the new base.
24. Repeat steps 14 to 23 until all bases for the NXT machine have been specified.
25. If there are any other NXT machines on the same line then select the new NXT machine and repeat steps 7 to 24 until all NXT machines in the line have been specified.
26. If there are any other lines for this Kit Server with NXT machines, add the machines at this time.
27. Select [Save] from the [File] menu and then [OK], and the file is saved to the database and computers.
28. Select [Exit] from the [File] menu to quit Kit Line Configuration Editor.

6.2.3 Setting the NXT Fujitrax configuration settings

Follow the steps below to change the setting on the NXT machine to work with the Fujitrax Verifier system..

1. Double-click the [Internet Explorer] icon on the desktop.
2. Enter the address (URL) "http://<NXT accessory software server name>/fujiweb" and then press Enter. If the server computer is located and the server is running, a loading page displays. Once the necessary items have been loaded, the [Home] page displays. This page provides basic production information for the NXTs.
3. From Floor Monitor, click the machine or module number for the NXT for which Machine Accessories is to be used. The Machine Accessories log on page is displayed
4. Enter or select a user ID from the drop-down list.
5. Enter the password for the user and click [Log on]. Once connected to the machine, the top diagram of the picture will match the machine that was selected. In the lower left side, the menu for possible actions displays. In the lower right side, the details for the selected item displays.
6. Click [Machine Configuration] from [Menu]. Accessory Software connects to the machine and receives the machine information. When completed, the settings page displays.
7. Select [Fujitrax Settings] from the [Category] drop-down list. When a category has been selected the settings shown under the list automatically change to the selected category.
8. Select the [ON] option for the [Verify ON/OFF] settings.
9. Leave the other settings with their default settings unless special settings are required. For details on the settings, refer to the NXT Accessory Software Operation Manual.
10. Once the settings have been completed, click [Send to Machine] to send the new setting to the machine. During transmission to the machine, the operation panel will change to the transmission display. When sending the new setting is complete, a page displays with that message. If any other changes need to be made, use the drop-down list to select the category for the setting.
11. Once all changed settings have been sent to the machine, click [Close].

6.2.4 Registering users for Kit Handy access

Follow the steps below to allow the registered users to access the NXT information through Kit Handy.

1. Open Kit Manger by using the shortcut in the start up menu.
2. Enter “FUJIADMIN” as the user ID and then enter the appropriate password and service name for the master database. It is necessary to log on with this ID to change the Kit Handy settings.
3. Click [OK] and Kit Manager starts.
4. Double-click the factory from the left pane and the lines for that factory display.
5. Double-click the line to display the machines for that line.
6. Select the NXT machine and then right-click it. A shortcut menu displays.
7. Select [Handy User Settings] from the shortcut menu. The [Handy User Settings] dialog box for the selected machine displays.
8. Enter the user ID to be registered in the [User ID] text box.
9. Click [Add] and the entered user ID displays in the list.
10. Continue repeating steps 8 to 9 until all of the user IDs for that NXT have been registered.
11. Click [Close] to complete the user ID registration process. The registered user IDs are now capable of accessing the information screens for that NXT.
12. Log off Kit Manager by selecting [Exit] from the [File] menu.

MEMO:

FUJI Internet

Fuji Internet aims at providing up-to-date information to our customers in the most efficient manner. This site makes a range of services available, from manual updates and virtual training, to online technical reports. Fuji hopes that this site will be used as a source of information in addition to the services provided by your agent.
Fuji Internet is located at **http://www.fuji.co.jp/**
Fuji Internet membership is required to access the Technical Information section of the site. Please contact your agent for membership details.
At any comments or opinions regarding this document can be sent to **intnetqst@fuji.co.jp**

NXT Setup Manual

Management No.	Date	Notes
QD002-00	June 15, 2004	SET-NXT-1.0E
QD002-01	September 10, 2004	
QD002-02	April 26, 2005	
QD002-03	January 10, 2006	
QD002-04	February 22, 2006	
QD002-05	March 10, 2006	
QD002-06	March 20, 2006	
QD002-07	April 13, 2006	
QD002-07a	May 23, 2006	

FUJI Machine Manufacturing Co., Ltd.
19 Chausuyama, Yamamachi, Chiryu,
Aichi Prefecture, 472-8686 Japan

Fuji Machine Manufacturing Co., Ltd. serves its customers from the following locations:

Fuji Machine Manufacturing Co., Ltd.

19 Chausuyama Yamamachi, Chiryu, Aichi, 472-8686 Japan

Tel: 81-566-81-2111 Fax: 81-566-83-1140

Fuji America Corporation

171 Corporate Woods Parkway, Vernon Hills, IL. 60061 USA

Tel: 847-913-0162 Fax: 847-913-0186

Fuji Machine Mfg (Europe) GmbH

Peter-Sander-Str. 43, D-55252 Mainz-Kastel Germany

Tel: 06134-202120 Fax: 06134-202200

Fuji do Brasil Maquinas Industriais Ltda.

Rua Joao Cachoeira, 128 Itaim Bibi, Sao Paulo, SP 04535-000 Brazil

Tel: 55-11-3167-1650 Fax: 55-11-3079-1833

Fuji Machine Philippines, Inc.

Warehouse 888 Don Mariano Lim Industrial Complex (La Fuerza Compound)
Alabang, Zapote Rd., Almanza Uno Las Pinas City, Philippines

Tel: 02-809-4565 Fax: 02-807-2767

Fuji Machine Mfg (Singapore) Pte Ltd.

Blk 2/51, Ubi Avenue 1, #01-24, Paya Ubi Industrial Park,
Singapore 408933

Tel: 67464966 Fax: 68412326

Fuji Malaysia Office

C/O Mecomb Malaysia Sdn Bhd 2487, Jalan Sultan Azlan Shah,
11700 Penang, Malaysia

Tel: 04-656-4002 Fax: 04-656-2941

Fuji Taiwan Office

C/O Ascentex Industry Corp. 3 Fl, No. 396, Sec. 1, Nei Hu Rd., Taipei,
Taiwan R.O.C.

Tel: 02-8797-8716 Fax: 02-8797-8717

Fuji Machine Mfg. Co., Ltd. China Representative Office

Room A, 26F, Zhaofeng World Trade Building, No. 369, Jiangsu Road,
Shanghai, China

Tel: 021-5240-0730 Fax: 021-5240-0728